वैज्ञानिक तथा औद्योगिक अनुसंधान परिषद्
Council of Scientific & Industrial Research
राष्ट्रीय वांतरिक्ष प्रयोगशालाएं
National Aerospace Laboratories

CSIR - NAL Estd. 1959
ISO 9001 : 2015
Certified Organization

INVITATION FOR BIDS/NIT

Tender No. NAL/PUR/ACD/432/20-Y **Dated: 05-Jul-2021**

CSIR- National Aerospace Laboratories (NAL), Bengaluru, India is one of the premier laboratories under Council of Scientific and Industrial Research (CSIR), an autonomous body under Department of Scientific and Industrial Research, Government of India, New Delhi. CSIR-NAL is a Science and Knowledge based Research, Development and Consulting Organization. It is internationally known for its excellence in Scientific Research in Aerospace Engineering.

The Director, CSIR-NAL invites online quotation for procurement of the following item(s) for day to day research work.

Sl.No.	Description of Items	Unit	Quantity
1	**Metal Tool Set for RVS Composite Structure Manufacturing Please refer Annexure for detailed specification.**	Set	01

Single / Double Bid	**Single**	Tender Type	**Open**
Bid Security (EMD) (in INR)	Bid Security Declaration should be enclosed with quotation	**Bid submission end date**	**26-Jul-2021 10.00 Hrs**
Performance Security	Nil	**Bid opening date**	**27-Jul-2021 11.00 Hrs**

01. Tender Documents may be downloaded from Central Public Procurement Portal https://www.etenders.gov.in. Aspiring Bidders who have not enrolled/ registered in e- procurement should enroll/ register before participating through the website https://www.etenders.gov.in. The portal enrolment is free of cost. Bidders are advised to go through instructions provided at 'Instructions for online Bid Submission'.

02. Tenderers can access tender documents on the website (For searching in the NIC site https://www.etenders.gov.in, kindly go to Tender Search option, select tender type and select ' Council of Scientific and Industrial Research' in organization tab and select NAL-Bengaluru-CSIR in department type Thereafter, Click on "Search" button to view all CSIR-NAL, Bengaluru tenders). Select the appropriate tender and fill them with all relevant information and submit the completed tender document online on the website https://www/etenders.gov.in as per the schedule given in the next page.

03. Either the Indian Agent on behalf of the Foreign principal or the Foreign principal can bid directly in a tender but not both. However, the offer of the Indian Agent should also accompany the authorization letter from their principal. To maintain sanctity of tendering system, one Indian Agent cannot represent two different Foreign principals in one tender.

04. Unsolicited / conditional / unsigned tenders (Quotations)/Quotations received after the due date and time **shall be summarily rejected**. The Bidder shall comply the terms and conditions of the tender, failing which, the offer shall be liable for rejection.

05. The Bidders proposing to supply finished products directly/indirectly from vendors of countries sharing the land border with India should submit copy of registration done with the Ministry of Home Affairs and Ministry of External Affairs.

06. If the Products supplied are not from vendors of countries sharing land border with India, the Bidders have to enclose a declaration to that effect.

05/07/21

पी बी सं. 1779, एचएएल एयरपोर्ट रोड , कोडिहल्ली, बेंगलुरु - 560 017, भारत,
P B No 1779, HAL Airport Road, Kodihalli, Bengaluru - 560 017, INDIA
फोन / Phone : (का./ Off) : +91 - 80 - 2508 6040 - 45, फैक्स / FAX : +91-80-2526 9611
http//www.nal.res.in purchasek@nal.res.in

The bids of those Bidders failing to comply with the above clauses will be summarily rejected.

07. Bidders are requested to refer to the instruction regarding Procurement Policies for Make in India issued by Ministry of Commerce and Industry, Department of Industrial Policy and Promotion dated. 28-May-2018 and 4-Jun-2020 and guidelines as and when issued.

08. The prospective bidders are requested to refer to the Standard Terms and Conditions available on NAL Internet (www.nal.res.in) under the icon Tender-Purchase before formulating and submitting their bids

09. The Director, CSIR- National Aerospace Laboratories, Bengaluru reserves the right to accept any or all the tenders either in part or in full or to split the order without assigning any reasons there for.

05/04/21

Raman Kumar
Stores & Purchase Officer

Specifications and Allied Technical Details for Metal Tool Set for RVS Composite Structure

1 **End Use:** Fabrication of Co-cured RVS composite structure using autoclave moulding technique with autoclave conditions of 180°C to 200°C with external pressure of 7bar.

2 **Detailed Specifications:**

A. Steel Tool Assembly (Qty.: 01 Set Mould)

1) Fabrication & supply of steel tool assembly as per the drawings and CAD Models listed below.

Sl. No.	Tool Description	Drawing Number	Number of Drawing Sheets	Qty	Remarks
1	METAL MOULD FOR COCURED CE SHELL ASSLY S3	0127-1000T-000-000	2 Sheets	1 Set	
2	STAND FOR METAL MOULD	0127-1000TS-000-000	1Sheet	1 Set	
3	SCREW JACK FOR STAND	0127-1000TJ-000-000	1Sheet	1 Set	
4	LAYUP TOOL FOR BULKHEAD ASSEMBLY B1 (FE)	0127-1200TL-000-000	1Sheet	1 Set	
5	POSITIONING TOOL FOR BULKHEAD ASSEMBLY B1 (FE)	0127-1200TP-000-000	1Sheet	1 Set	
6	POSITIONING TOOL FOR FRAME-1 ASSEMBLY	0127-1500TP-000-000	2 Sheets	1 Set	
7	POSITIONING TOOL FOR FRAME-2 ASSEMBLY	0127-1600TP-000-000	2 Sheets	1 Set	
8	LAYUP TOOL FOR BULKHEAD ASSEMBLY B2 (INT)	0127-1300TL-000-000	2 Sheets	1 Set	
9	POSITIONING TOOL FOR BULKHEAD ASSEMBLY B2 (INT)	0127-1300TP-000-000	3 Sheets	1 Set	
10	LAYUP TOOL FOR BULKHEAD ASSEMBLY B3 (AE)	0127-1400TL-000-000	1Sheet	1 Set	
11	POSITIONING TOOL FOR BULKHEAD ASSEMBLY B3 (AE)	0127-1400TP-000-000	1Sheet	1 Set	
12	POSITIONING TOOL TUBE AND COLLARS FOR B1,B2,B3 BULKHEAD AND FRAME-1 & 2 ASSY	0127-1000TP-000-000	1Sheet	1 Set	
13	ROVING TOOLS FOR B1,B2,B3 BULKHEAD AND FRAME-1 & 2	0127-1000R-000-000	1Sheet	1Set	

2) Drawings and Catia V5 models listed above will be supplied by NAL for mould fabrication.

3) Mould Material and build quality requirements should meet the drawings requirements.

4) Primary mould Material: SA 516 Gr.70/ Equivalent. For detailed item specification, refer drawings. Vendor to take concurrence of CSIR-NAL prior to using the equivalent/alternate materials. Equivalent material shall be selected based on chemical composition, machinability, weldability and mould functionality with respect to SA516 Gr.70.

5) Use single faceplate at the mould contour region. Before machining of the mould contour, form the faceplate to the near net profile to ensure thickness consistency in the faceplate after final

machining.

6) Back up structure consisting of longitudinal and transverse ribs to be welded locally with faceplate backside as per the respective drawings of the moulds.

7) All flange plates should be welded together with the formed faceplate for the dimension stability of the mould without any vacuum leaks. For leak proof joints between the faceplate and flange plate typical grooves/chamfers shall be made and filled properly as shown in Fig.1.

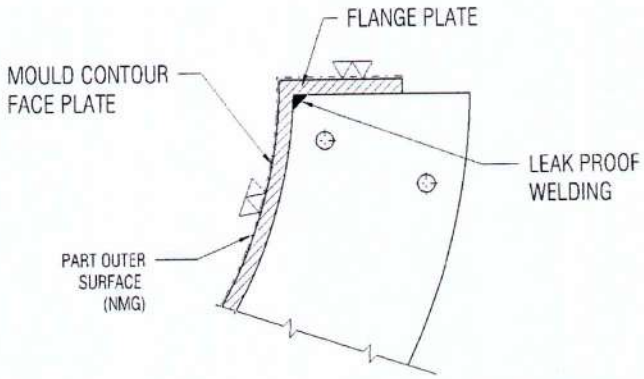

Fig.1: Typical leak proof welds between Faceplate and Flange plate

8) Tolerance on the faceplate thickness should be within ±1.0mm. Typical Faceplate drawing thickness (ref drawings for details).

9) All machined surfaces/ planes should be hard chrome finish. Other area for corrosion resistance to be painted with high temperature silver paint to withstand operating temperature of 250°C. (The thickness of the hard chrome coating may be 20 to 30 microns.)

10) Contour and reference planes as shown in Fig.1 should be machined to 2 triangle (▽▽) surface finish standard.

11) Contour tolerance for the mould surface should be within +/-0.30 mm with respect to the tooling holes as per drawing.

12) For both mould-1 & 2, the contour inspection shall be carried out w.r.t tooling holes at every 50mm grid location along length and width. Closer readings to be taken on need basis / Laser scanning report for the mould surface.

13) Part boundary marking-grooves should be done as called in the drawings. The tolerance on the mould groove boundary is ±1.0 mm

14) Alignment of mould-1 on Mould-2 assembly shall be ensured as per assembly drawing.

15) Few modifications in the backup structure frame allowed without affecting the tool functionality in order to facilitate trolley attachment, connection to rotating mechanism and accessibility for welding (if any) in concurrence with NAL-ACD and modifications (if any) to be approved by NAL-ACD without any additional cost escalation.

B. STAND FOR METAL MOULD:

Vendor to fabricate the shop floor friendly stand as per drawing Metal Mould for Cocured CE Shell Assly S3 (Dwg No. 0127-1000TS-000-000)by following general industrial safety requirements. Stand should be designed to carry the assembled weight of mould & assemblies together by following general industrial safety requirements. The vendor should demonstrate topple free and trouble free movement of stand after loading the mould assembly at his premises to NAL team.

Suitable painting should be done on stand as per mentioned in the drawing to safe guard from rusting.

C. Rotating mechanism:

Vendor to design and fabricate a suitable rotating mechanism for rotating the mould assembly on stand by following general industrial safety requirements. Suitable bearing should be used on the mechanism to safe guard from rusting and free movement of mould on roller. Rotating mechanism should be demonstrated for rotating mould on the stand safely by the vendor at his premises in the presence of NAL team.

D. Mould Lifting :
Vendor should demonstrate mould lifting mechanisam and demoulding of assembled mould by following general industrial safety requirements. Each lift clamp should be designed to carry both the moulds together safely.

3 List of Deliverables (BoQ):

Sr. No.	Item Description	Unit	Quantity
A. Moulds and accessories:			
1	METAL MOULD FOR COCURED CE SHELL ASSLY S3	Nos.	One Set
2	STAND FOR METAL MOULD	Nos.	One Set
3	SCREW JACK FOR STAND	Nos.	One Set
4	LAYUP TOOL FOR BULKHEAD ASSEMBLY B1 (FE)	Nos.	One Set
5	POSITIONING TOOL FOR BULKHEAD ASSEMBLY B1 (FE)	Nos.	One Set
6	POSITIONING TOOL FOR FRAME-1 ASSEMBLY	Nos.	One Set
7	POSITIONING TOOL FOR FRAME-2 ASSEMBLY	Nos	One Set
8	LAYUP TOOL FOR BULKHEAD ASSEMBLY B2 (INT)	Nos	One Set
9	POSITIONING TOOL FOR BULKHEAD ASSEMBLY B2 (INT)	Nos	One Set
10	LAYUP TOOL FOR BULKHEAD ASSEMBLY B3 (AE)	Nos	One Set
11	POSITIONING TOOL FOR BULKHEAD ASSEMBLY B3 (AE)	Nos	One Set
12	POSITIONING TOOL TUBE AND COLLARS FOR B1,B2,B3 BULKHEAD AND FRAME-1 & 2 ASSY	Nos	One Set
13	ROVING TOOLS FOR B1,B2,B3 BULKHEAD AND FRAME-1 & 2	Nos	One Set
B. Documents/CAD data/Reports:			
1.	CMM/ Laser Tracker Report		
3.	Raw Material CoC & Heat treatment /Stress relieve Report		
4.	Surface Finish/Treatment Report		
5.	NDT reports of welding ensuring defect free joints.		
6.	Any updated mould 3D CAD model and drawings released by vendor. One set of released drawings should be given in print.		
7.	Updated CAD model of Mould if any		

4 General

1. The Supplier shall at its own expense and at no cost to the Purchaser carry out all such tests and/or inspections of the Goods and Related Services as are specified here.

2. The inspections and tests may be conducted on the premises of the Supplier or its subcontractor(s), at the point of delivery and/or at the Goods final destination.

3. Whenever the Supplier is ready to carry out any such test and inspection, it shall give a reasonable advance notice, including the place and time, to the Purchaser. The Supplier shall obtain from any relevant third party or manufacturer any necessary permission or consent to enable the Purchaser or its designated representative to attend the test and/or inspection.

4. Should any inspected or tested Goods fail to conform to the specifications, the Purchaser may reject the goods and the Supplier shall either replace the rejected Goods or make alterations necessary to meet specification requirements free of cost to the Purchaser.

5. The Purchaser's right to inspect, test and, where necessary, reject the Goods after the Goods' arrival at final destination shall in no way be limited or waived by reason of the Goods having previously been inspected, tested and passed by the Purchaser or its representative prior to the Goods shipment.

6. The Supplier shall provide the Purchaser with a report of the results of any such test and/or inspection.

7. With a view to ensure that claims on insurance companies, if any, are lodged in time, the bidders and /or the Indian agent, if any, shall be responsible for follow up with their principals for ascertaining the dispatch details and informing the same to the Purchaser and he shall also liaise with the Purchaser to ascertain the arrival of the consignment after customs clearance so that immediately thereafter in his presence the consignment could be opened and the insurance claim be lodged, if required, without any loss of time. Any delay on the part of the bidder/ Indian Agent would be viewed seriously and he shall be directly responsible for any loss sustained by the purchaser on the event of the delay.

8. Before the goods and equipment are taken over by the Purchaser, the Supplier shall supply operation and maintenance Manuals together with Drawings of the goods and equipment built. These shall be in such details as will enable the Purchase to operate, maintain, adjust and repair all parts of the works as stated in the specifications.

9. The Manuals and Drawings shall be in the ruling language (English) and in such form and numbers as stated in the Contract.

10. Unless and otherwise agreed, the goods and equipment shall not be considered to be completed for the purposes of taking over until such Manuals and Drawing have been supplied to the Purchaser.

11. On successful completion of acceptability test, receipt of deliverables, etc. and after the Purchaser is satisfied with the working of the equipment, the acceptance certificate signed by the Supplier and the representative of the Purchaser will be issued. The date on which such certificate is signed shall be deemed to be the date of successful commissioning of the equipment.

5 **Manufacturer's Inspection Certificate**

After the goods are manufactured and assembled, inspection and testing of the goods shall be carried out at the supplier's plant by the supplier, prior to shipment to check whether the goods are in conformity with the technical specifications. Manufacturer's test certificate with data sheet shall be issued to this effect and submitted along with the delivery documents. The purchaser reserves the options to be present at the supplier's premises during such inspection and testing.

6 **Pre Dispatch Inspection**

1)	Location	At Vendor location
2)	Number of persons	02
3)	Period of Pre Dispatch Inspection	02 day
4)	Nature of Pre Dispatch Inspection	1. Mould Contour and Dimensional Inspection. 2. Assembly verification of mould-1 with mould-2 3. Verification of rotating operation of mould 4. Verification of stand movement

7 **Installation, Commissioning and Acceptance Test**

The acceptance test will be conducted by the Purchaser, their consultant or other such person nominated by the Purchaser at its option after the equipment is installed at Purchaser's site in the presence of supplier's representatives. The acceptance will involve trouble free operation. There shall not be any additional charges for carrying out acceptance test. No malfunction, partial or complete failure of any part of the equipment is expected to occur. The Supplier shall maintain necessary log in respect of the result of the test to establish to the entire satisfaction of the Purchaser, the successful completion of the test specified.

On the event of the ordered item failing to pass the acceptance test, a period not exceeding two weeks will be given to rectify the defects and clear the acceptance test, failing which, the Purchaser reserve the right to get the equipment replaced by the Supplier at no extra cost to the Purchaser.

Successful conduct and conclusion of the acceptance test for the installed goods and equipment shall also be the responsibility and at the cost of the Supplier.

The acceptance tests at the final destination include the following:

a)	Mould NMG/surface Contour and Dimensional measurement, checks and Inspection as per the supplied drawings.
b)	Vacuum Integrity and leak test Note: Maximum allowed vacuum leakage rate is 0.01bar/min and should not exceed after a retention time of minimum of 5 minutes after disconnecting the vacuum source. In case of leaks (if any), vendor should carry out repair work without any additional cost to NAL.
c)	Functionality checks on i. STAND FOR METAL MOULD to ensure trouble free movement of mould and No toppling. ii. Screw Jack to ensure trouble free standing of mould Assembly and No toppling. iii. Rotating Mechanism to ensure rotation of mould on the stand in a trouble free smooth operation without any jerks and shakes. iv. Mould Lifting to ensure uniform lifting of mould & disassemble mould and safety

8 **Incidental Services**

(i) **On site Comprehensive Warranty:**

- **1 Year** from Installation & Commissioning and date of acceptance
- In case the Equipment / System remains non-operational for more than **30 days** then warranty period will be extended for the equivalent period for which Equipment / System remained non-operational. Warranty extension in such case shall be done without prejudice to any other Term & condition of the contract

9 **Delivery Schedule (including supply, installation, commissioning, training & acceptance)**

Delivery of the Item		Installation & Commissioning		Training At CSIR_NAL, if any	Acceptance of the item
Days/ Weeks/Months	Location	Days/ Weeks/Months from the date of receipt of equipment	Location	Days/ Weeks/Months from the date of Installation & Commissioning	Days/ Weeks/Months from the date of Installation, Commissioning & Training
6 Weeks	CSIR-NAL,ACD Bengaluru	Not Applicable		Not Applicable	10 Days

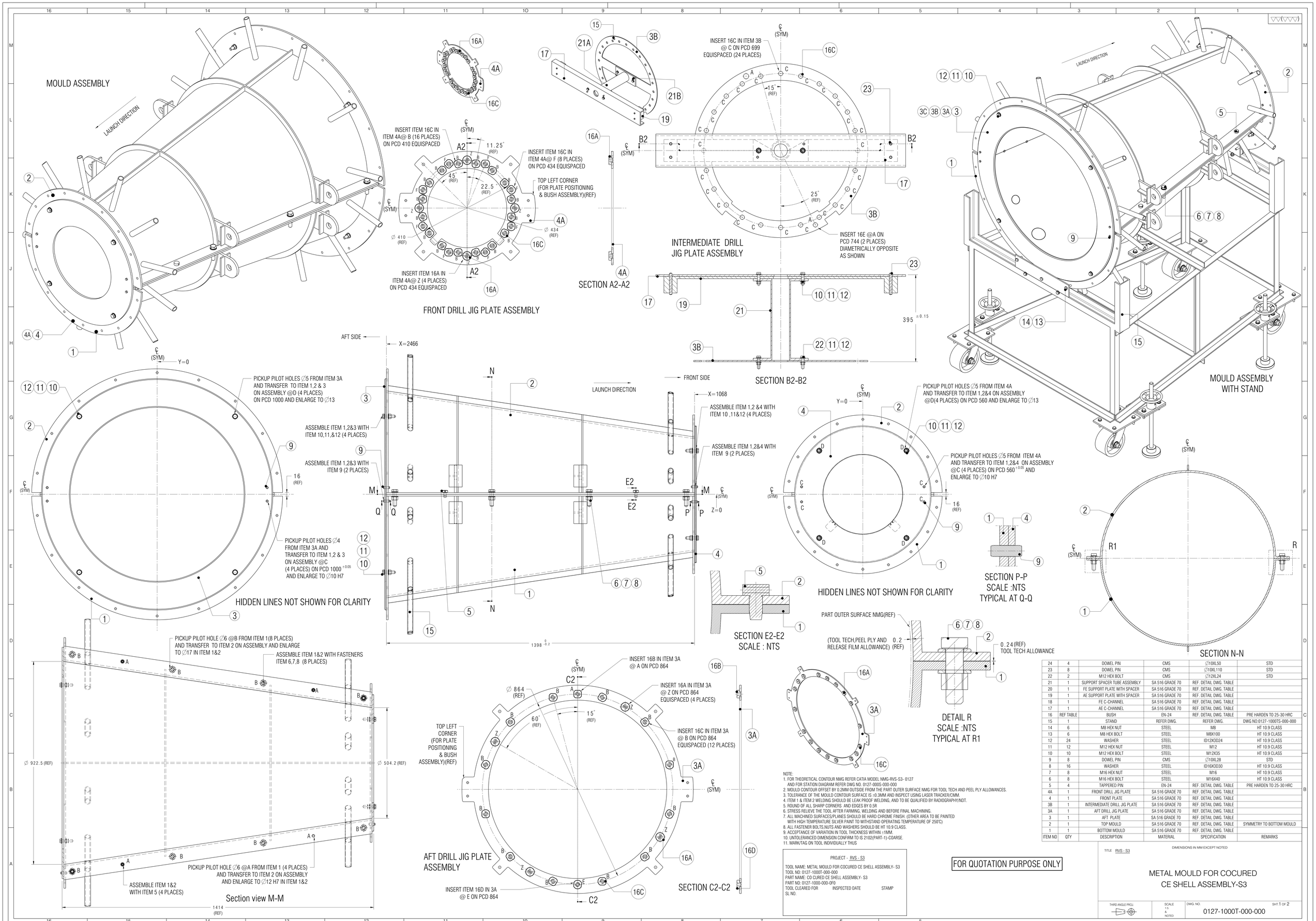

ITEM NO	QTY	DESCRIPTION	MATERIAL	SPECIFICATION	REMARKS
24	4	DOWEL PIN	CMS	∅10XL50	STD
23	8	DOWEL PIN	CMS	∅10XL110	STD
22	2	M12 HEX BOLT	CMS	∅12XL24	STD
21	1	SUPPORT SPACER TUBE ASSEMBLY	SA 516 GRADE 70	REF. DETAIL DWG. TABLE	
20	1	FE SUPPORT PLATE WITH SPACER	SA 516 GRADE 70	REF. DETAIL DWG. TABLE	
19	1	AE SUPPORT PLATE WITH SPACER	SA 516 GRADE 70	REF. DETAIL DWG. TABLE	
18	1	FE C-CHANNEL	SA 516 GRADE 70	REF. DETAIL DWG. TABLE	
17	1	AE C-CHANNEL	SA 516 GRADE 70	REF. DETAIL DWG. TABLE	
16	REF TABLE	BUSH	EN-24	REF. DETAIL DWG. TABLE	PRE HARDEN TO 25-30 HRC
15	1	STAND	REFER DWG.	REFER DWG.	DWG NO:0127-1000TS-000-000
14	6	M8 HEX NUT	STEEL	M8	HT 10.9 CLASS
13	6	M8 HEX BOLT	STEEL	M8X100	HT 10.9 CLASS
12	24	WASHER	STEEL	ID12XOD24	HT 10.9 CLASS
11	12	M12 HEX NUT	STEEL	M12	HT 10.9 CLASS
10	10	M12 HEX BOLT	STEEL	M12X35	HT 10.9 CLASS
9	8	DOWEL PIN	CMS	∅10XL28	STD
8	16	WASHER	STEEL	ID16XOD30	HT 10.9 CLASS
7	8	M16 HEX NUT	STEEL	M16	HT 10.9 CLASS
6	8	M16 HEX BOLT	STEEL	M16X40	HT 10.9 CLASS
5	4	TAPPERED PIN	EN-24	REF. DETAIL DWG. TABLE	PRE HARDEN TO 25-30 HRC
4A	1	FRONT DRILL JIG PLATE	SA 516 GRADE 70	REF. DETAIL DWG. TABLE	
4	1	FRONT PLATE	SA 516 GRADE 70	REF. DETAIL DWG. TABLE	
3B	1	INTERMEDIATE DRILL JIG PLATE	SA 516 GRADE 70	REF. DETAIL DWG. TABLE	
3A	1	AFT DRILL JIG PLATE	SA 516 GRADE 70	REF. DETAIL DWG. TABLE	
3	1	AFT PLATE	SA 516 GRADE 70	REF. DETAIL DWG. TABLE	
2	1	TOP MOULD	SA 516 GRADE 70	REF. DETAIL DWG. TABLE	SYMMETRY TO BOTTOM MOULD
1	1	BOTTOM MOULD	SA 516 GRADE 70	REF. DETAIL DWG. TABLE	

NOTE:
1. FOR THEORETICAL CONTOUR NMG REFER CATIA MODEL NMG-RVS-S3- 0127 AND FOR STATION DIAGRAM REFER DWG NO. 0127-000S-000-000
2. MOULD CONTOUR OFFSET BY 0.2MM OUTSIDE FROM THE PART OUTER SURFACE NMG FOR TOOL TECH AND PEEL PLY ALLOWANCES.
3. TOLERANCE OF THE MOULD CONTOUR SURFACE IS ±0.3MM AND INSPECT USING LASER TRACKER/CMM.
4. ITEM 1 & ITEM 2 WELDING SHOULD BE LEAK PROOF WELDING, AND TO BE QUALIFIED BY RADIOGRAPHY/NDT.
5. ROUND OF ALL SHARP CORNERS AND EDGES BY 0.5R
6. STRESS RELIEVE THE TOOL AFTER FARMING, WELDING AND BEFORE FINAL MACHINING.
7. ALL MACHINED SURFACES/PLANES SHOULD BE HARD CHROME FINISH. (OTHER AREA TO BE PAINTED WITH HIGH TEMPERATURE SILVER PAINT TO WITHSTAND OPERATING TEMPERATURE OF 250°C)
8. ALL FASTENER BOLTS,NUTS AND WASHERS SHOULD BE HT 10.9 CLASS.
9. ACCEPTANCE OF VARIATION IN TOOL THICKNESS WITHIN ±1MM.
10. UNTOLERANCED DIMENSION CONFIRM TO IS 2102(PART-1)-COARSE.
11. MARK/TAG ON TOOL INDIVIDUALLY THUS

PROJECT - RVS - S3

TOOL NAME: METAL MOULD FOR COCURED CE SHELL ASSEMBLY- S3
TOOL NO: 0127-1000T-000-000
PART NAME: C0 CURED CE SHELL ASSEMBLY- S3
PART NO: 0127-1000-000-0F0
TOOL CLEARED FOR INSPECTED DATE STAMP
SL NO.

FOR QUOTATION PURPOSE ONLY

DIMENSIONS IN MM EXCEPT NOTED

TITLE RVS - S3

METAL MOULD FOR COCURED CE SHELL ASSEMBLY-S3

THIRD ANGLE PROJ. | SCALE 1:5 & NOTED | DWG. NO. 0127-1000T-000-000 | SHT.1 OF 2

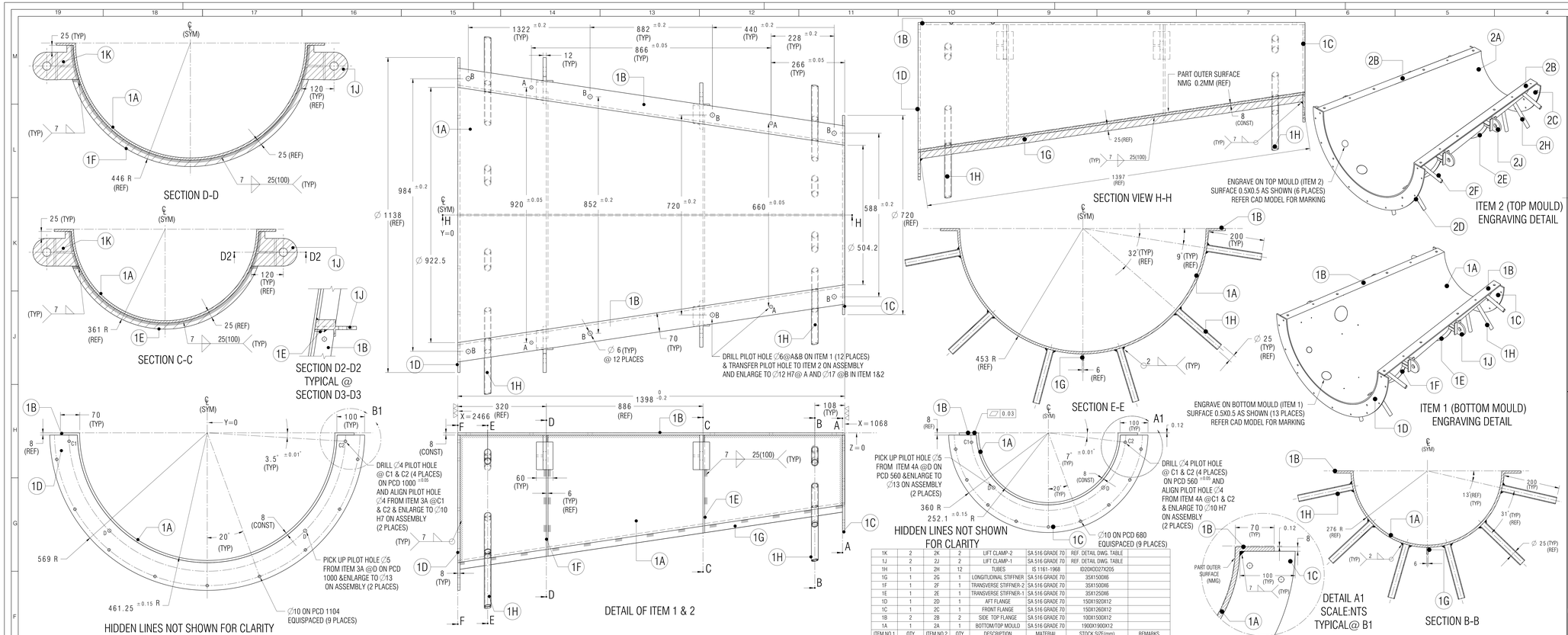

1K	2	2K	2	LIFT CLAMP-2	SA 516 GRADE 70	REF. DETAIL DWG. TABLE	
1J	2	2J	2	LIFT CLAMP-1	SA 516 GRADE 70	REF. DETAIL DWG. TABLE	
1H	1	2H	12	TUBES	IS 1161-1968	ID20X0D27X205	
1G	1	2G	1	LONGITUDINAL STIFFNER	SA 516 GRADE 70	35X150X6	
1F	1	2F	1	TRANSVERSE STIFFNER-2	SA 516 GRADE 70	35X150X6	
1E	1	2E	1	TRANSVERSE STIFFNER-1	SA 516 GRADE 70	35X125X6	
1D	1	2D	1	AFT FLANGE	SA 516 GRADE 70	150X1920X12	
1C	1	2C	1	FRONT FLANGE	SA 516 GRADE 70	150X1260X12	
1B	2	2B	2	SIDE TOP FLANGE	SA 516 GRADE 70	100X1500X12	
1A	1	2A	1	BOTTOM/TOP MOULD	SA 516 GRADE 70	1900X1900X12	
ITEM NO 1	QTY	ITEM NO 2	QTY	DESCRIPTION	MATERIAL	STOCK SIZE(mm)	REMARKS

4	1	FRONT PLATE	SA 516 GRADE 70	640X640X10			
ITEM NO	QTY	DESCRIPTION	MATERIAL	STOCK SIZE	REMARKS		

3	1	AFT PLATE	SA 516 GARDE 70	1070X1070X10	
ITEM NO	QTY	DESCRIPTION	MATERIAL	STOCK SIZE	REMARKS

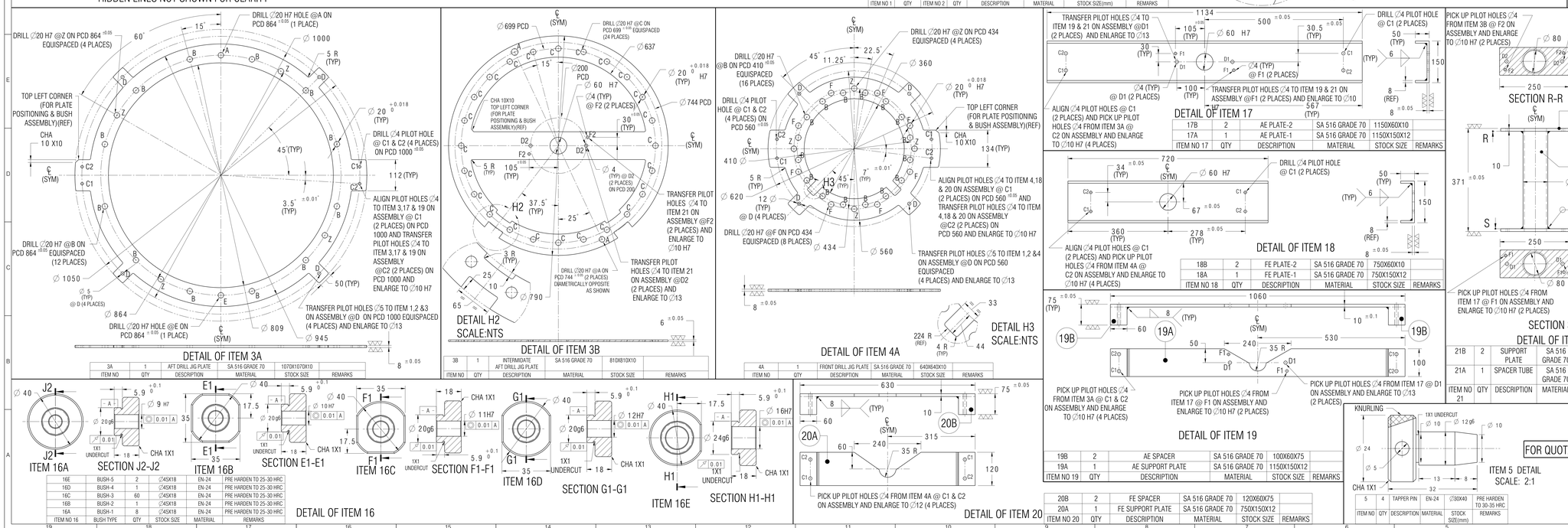

3B	1	INTERMIDATE AFT DRILL JIG PLATE	SA 516 GRADE 70	810X810X10	
ITEM NO	QTY	DESCRIPTION	MATERIAL	STOCK SIZE	REMARKS

4A	1	FRONT DRILL JIG PLATE	SA 516 GRADE 70	640X640X10	
ITEM NO	QTY	DESCRIPTION	MATERIAL	STOCK SIZE	REMARKS

17B	2	AE PLATE-2	SA 516 GRADE 70	1150X60X10	
17A	1	AE PLATE-1	SA 516 GRADE 70	1150X150X12	
ITEM NO 17	QTY	DESCRIPTION	MATERIAL	STOCK SIZE	REMARKS

18B	2	FE PLATE-2	SA 516 GRADE 70	750X60X10	
18A	1	FE PLATE-1	SA 516 GRADE 70	750X150X12	
ITEM NO 18	QTY	DESCRIPTION	MATERIAL	STOCK SIZE	REMARKS

19B	2	AE SPACER	SA 516 GRADE 70	100X60X75	
19A	1	AE SUPPORT PLATE	SA 516 GRADE 70	1150X150X12	
ITEM NO 19	QTY	DESCRIPTION	MATERIAL	STOCK SIZE	REMARKS

20B	2	FE SPACER	SA 516 GRADE 70	120X60X75	
20A	1	FE SUPPORT PLATE	SA 516 GRADE 70	750X150X12	
ITEM NO 20	QTY	DESCRIPTION	MATERIAL	STOCK SIZE	REMARKS

21B	2	SUPPORT PLATE	SA 516 GRADE 70	300X150X10	
21A	1	SPACER TUBE	SA 516 GRADE 70	∅89X∅80X360	
ITEM NO 21	QTY	DESCRIPTION	MATERIAL	STOCK SIZE	REMARKS

IK-3	1J-3	1	PLATE-3	SA 516 GRADE 70	70X36X6
IK-2	1J-2	2	PLATE-2	SA 516 GRADE 70	100X24X6
IK-1	1J-1	1	PLATE-1	SA 516 GRADE 70	200X150X12
ITEM NO IK	ITEM NO 1J	QTY	DESCRIPTION	MATERIAL	STOCK SIZE REMARKS

5	4	TAPPER PIN	EN-24	∅30X40	PRE HARDEN TO 30-35 HRC	
ITEM NO	QTY	DESCRIPTION	MATERIAL	STOCK SIZE(mm)	REMARKS	

16E	BUSH-5	2	∅45X18	EN-24	PRE HARDEN TO 25-30 HRC	
16D	BUSH-4	1	∅45X18	EN-24	PRE HARDEN TO 25-30 HRC	
16C	BUSH-3	60	∅45X18	EN-24	PRE HARDEN TO 25-30 HRC	
16B	BUSH-2	1	∅45X18	EN-24	PRE HARDEN TO 25-30 HRC	
16A	BUSH-1	8	∅45X18	EN-24	PRE HARDEN TO 25-30 HRC	
ITEM NO 16	BUSH TYPE	QTY	STOCK SIZE	MATERIAL	REMARKS	

DIMENSIONS IN MM EXCEPT NOTED

TITLE RVS-S3

METAL MOULD FOR CO CURED CE SHELL ASSEMBLY - S3

THIRD ANGLE PROJ.

SCALE 1:5 & NOTED

DWG. NO. 0127-1000T-000-000

SHT 2 OF 2

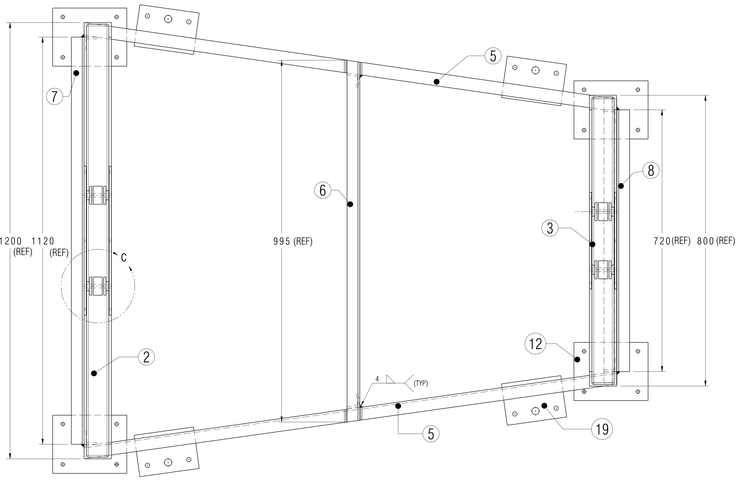

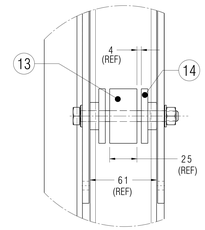

DETAIL C

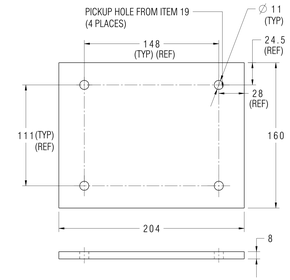

DETAIL OF ITEM 12

12	4	STAND PLATE	MS	204X160X8	
ITEM NO	QTY	DESCRIPTION	MATERIAL	SIZE	REMARKS

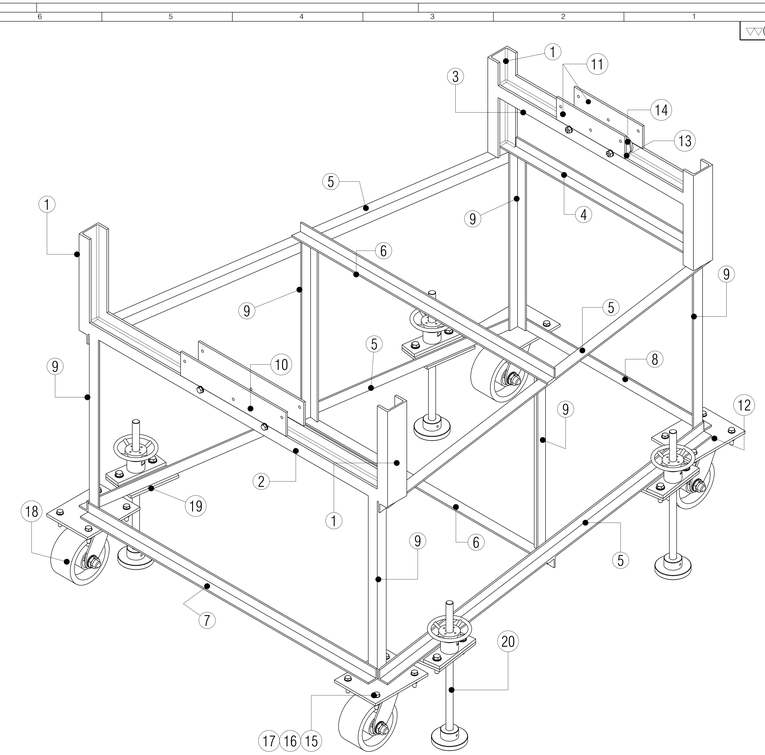

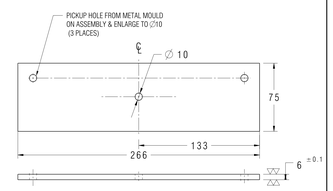

DETAIL OF ITEM 11

11	2	FRONT PLATE 75 ISF 6	STEEL FLAT IS:1731-1971	410	
ITEM NO	QTY	DESCRIPTION	MATERIAL	SIZE	REMARKS

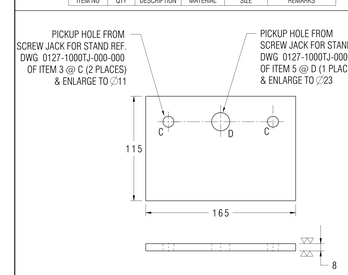

DETAIL OF ITEM 19

19	4	JACK PLATE	MS	165X115X8	
ITEM NO	QTY	DESCRIPTION	MATERIAL	SIZE	REMARKS

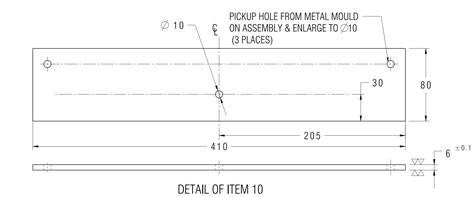

DETAIL OF ITEM 10

10	2	AFT PLATE 80 ISF 6	STEEL FLAT IS:1731-1971	410X80X6	
ITEM NO	QTY	DESCRIPTION	MATERIAL	SIZE	REMARKS

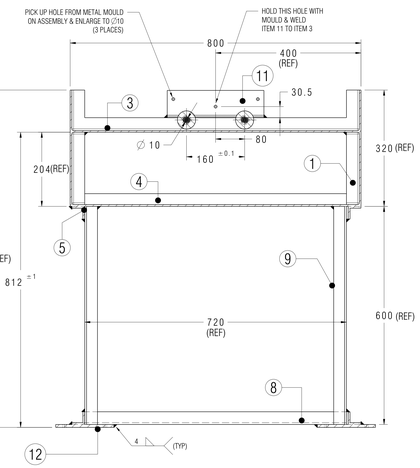

SECTION VIEW A-A

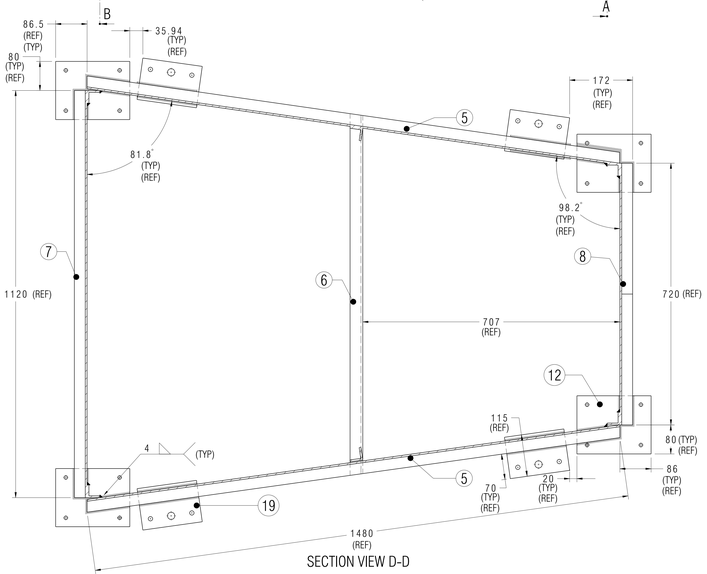

SECTION VIEW D-D

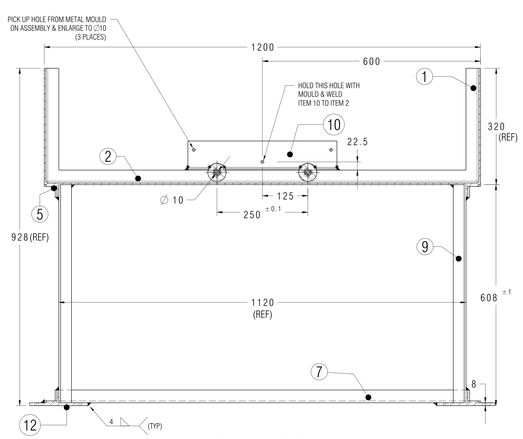

SECTION VIEW B-B

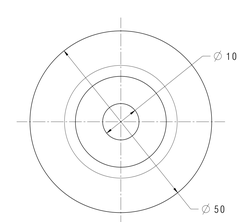

DETAIL OF ITEM 14

14	8	BUSH	EN-24	∅50X14	PRE HARDEN TO 30-35 HRC
ITEM NO	QTY	DESCRIPTION	MATERIAL	SIZE	REMARKS

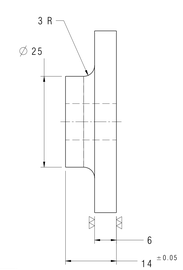

FOR QUOTATION PURPOSE ONLY

NOTE:
1. ROUND OF ALL SHARP CORNERS & EDGES BY 0.5R
2. STRESS RELIEF THE STAND ASSEMBLY AFTER WELDING & MACHINIG.
3.FINISH THE STAND ASSEMBLY WITH PHOSPHATE COATING FOR CORROSION RESISITANCE
4. ALL FASTENERS BOLTS,NUTS & WASHER TO BE HT 10.9 CLASS.
5.UNTOLERANCED DIMENSIONS CONFIRM TO IS 2102(PART-1)-COARSE
6.MARK ON THE STAND THUS "RVS MOULD STAND"

ITEM NO	QTY	DESCRIPTION	MATERIAL	LENGTH/SIZE (mm)	REMARKS
20	4	SCREW JACK FOR STAND	REFER DWG.	REFER DWG.	0127-1000TJ-000-000
19	4	JACK PLATES	MS	165X140X8	
18	4	WHEELS	NYLON	∅150X75	CAPACITY 1.5 TON
17	24	M 10 HEX NUT	STEEL	M10	HT 10.9 CLASS
16	48	WASHER	STEEL	ID10XOD20	HT 10.9 CLASS
15	24	M10 HEX BOLT	STEEL	M10X45	HT 10.9 CLASS
14	8	BUSH	EN-24	∅50X18	PRE HARDEN TO 30-35 HRC
13	4	BEARING WHEELS	STD	∅50X25	CAPACITY 1 TON
12	4	WHEEL PLATE	MS	204X160X8	
11	2	FRONT PLATE 75 ISF 6	IS:1731-1971	266X75X6	
10	2	AFT PLATE 80 ISF 6	IS:1731-1971	410X80X6	
9	6	L-ANGLE ISA 35X35X5	ST.STEEL IS 808	600	
8	1	L-ANGLE ISA 35X35X5	ST.STEEL IS 808	702	
7	1	L-ANGLE ISA 35X35X5	ST.STEEL IS 808	1126	
6	2	L-ANGLE ISA 35X35X5	ST.STEEL IS 808	986	
5	4	L-ANGLE ISA 35X35X5	ST.STEEL IS 808	1482	
4	1	L-ANGLE ISA 35X35X5	ST.STEEL IS 808	794	
3	1	C-CHANNEL ISMC 75X40X4.4	ST.STEEL IS 808	720	
2	1	C-CHANNEL ISMC 75X40X4.4	ST.STEEL IS 808	1120	
1	4	C-CHANNEL ISMC 75X40X4.4	ST.STEEL IS 808	320	

DIMENSIONS IN MM EXCEPT NOTED

TITLE RVS - S3

STAND FOR METAL MOULD

THIRD ANGLE PROJ.

SCALE 1:5 & NOTED

DWG. NO. 0127-1000TS-000-000

SHT. 1 OF 1

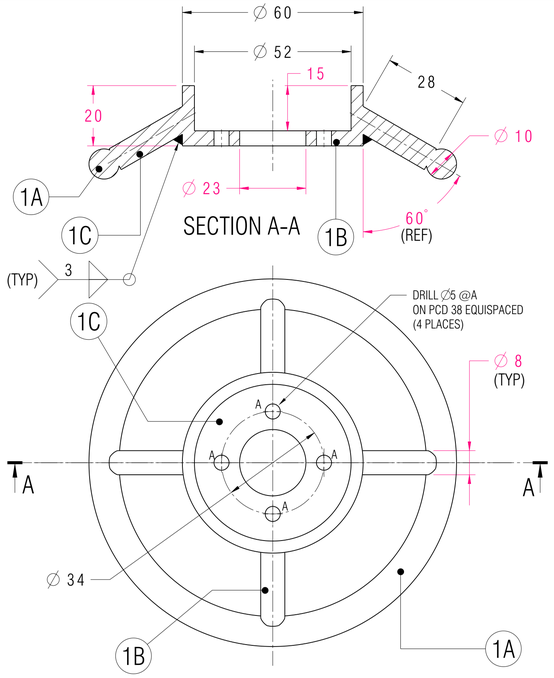

DETAIL OF ITEM 1

1C	1	FLANGE	MS	∅60X30	
1B	4	TIE ROD	MS	∅8X28	
1A	1	HANDLE	MS		
ITEM NO 1	QTY	DESCRIPTION	MATERIAL	SIZE(mm)	REMARKS

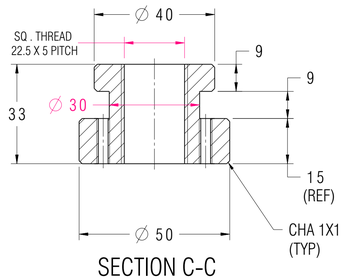

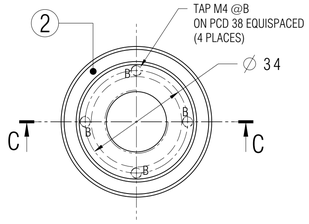

DETAIL OF ITEM 2

2	1	NUT	MS	∅50X33	
ITEM NO	QTY	DESCRIPTION	MATERIAL	SIZE(mm)	REMARKS

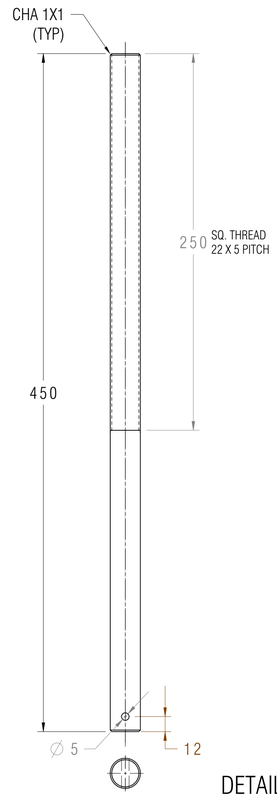

DETAIL OF ITEM 4

4	1	ROD	MS	∅23X450	
ITEM NO	QTY	DESCRIPTION	MATERIAL	SIZE(mm)	REMARKS

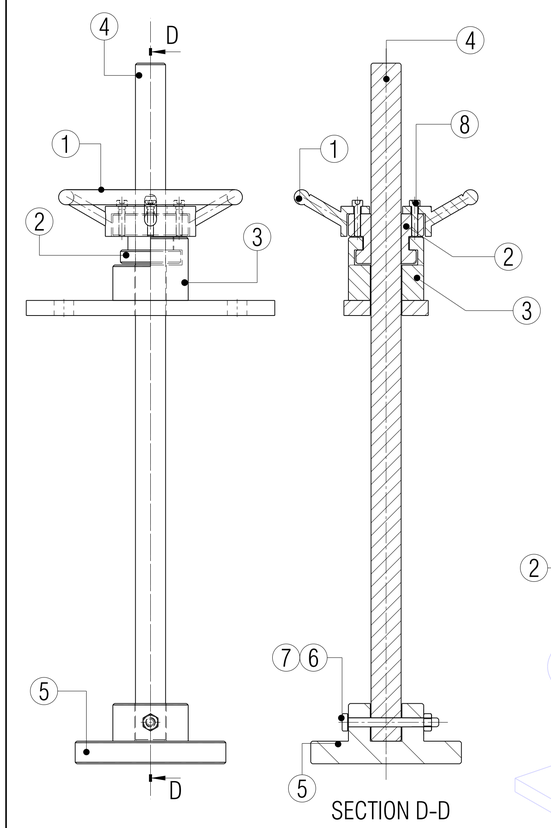

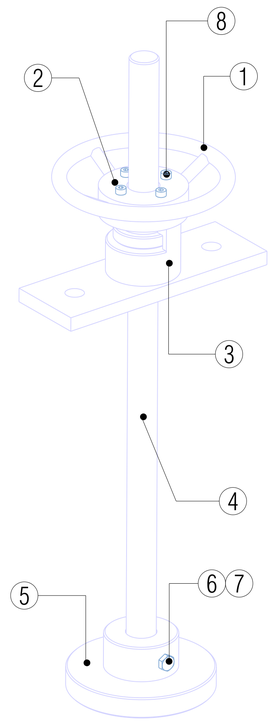

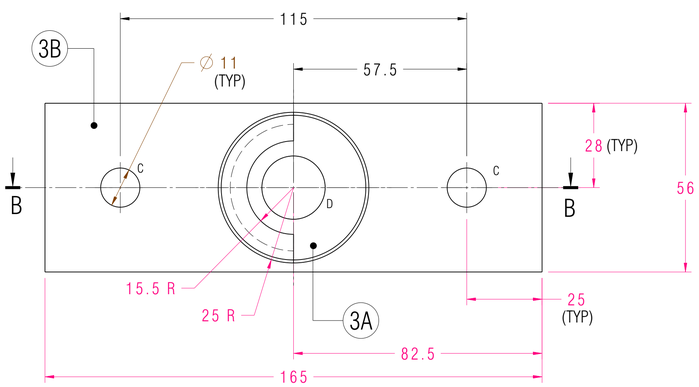

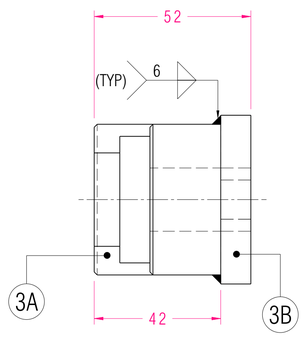

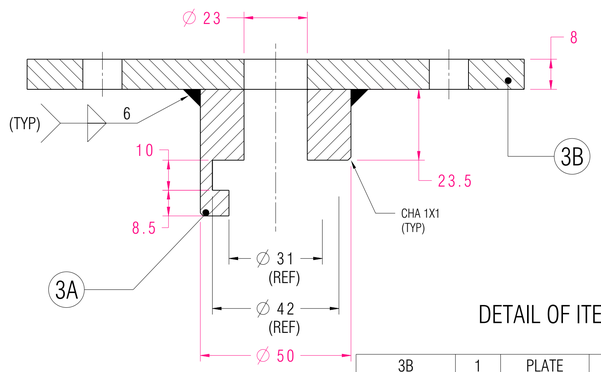

SECTION B-B

DETAIL OF ITEM 3

3B	1	PLATE	MS	56X165X8	
3A	1	BLOCK	MS	∅50X42	
ITEM NO 3	QTY	DESCRIPTION	MATERIAL	SIZE(mm)	REMARKS

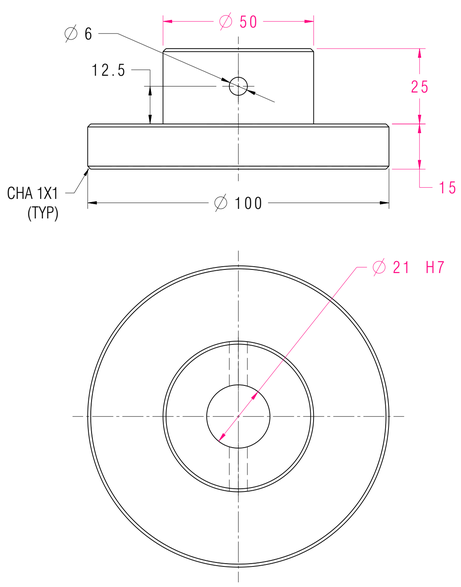

5	1	BUSH	EN-24	∅100X40	PRE HARDEN TO 25-30HRC
ITEM NO	QTY	DESCRIPTION	MATERIAL	STOCK SIZE(mm)	REMARKS

8	4	HEXAGON SOCKET HEAD CAPSCREW	STD	M4X20	IS:2269
7	1	M5 HEX NUT	STEEL	M5	HT 10.9 CLASS
6	1	M5 HEX BOLT	STEEL	M5X60	HT 10.9 CLASS
5	1	BUSH	EN-24	REF.DETAIL DWG TABLE	
4	1	JACK ROD	MS	REF.DETAIL DWG TABLE	
3	1	SUPPORT BLOCK ASSEMBLY	MS	REF.DETAIL DWG TABLE	
2	1	NUT	MS	REF.DETAIL DWG TABLE	
1	1	HANDLE CAP	MS	REF.DETAIL DWG TABLE	
ITEM NO	QTY	DESCRIPTION	MATERIAL	STOCK SIZE(mm)	REMARKS

NOTE:
1. ROUND OF ALL SHARP CORNERS AND EDGES BY 0.5R
2. STRESS RELIEVE THE TOOL AFTER FORMING, WELDING AND BEFORE FINAL MACHINING.
3. ALL MACHINED SURFACES/PLANES SHOULD BE HARD CHROME FINISH. (OTHER AREA TO BE PAINTED WITH HIGH TEMPERATURE SILVER PAINT TO WITHSTAND OPERATING TEMPERATURE OF 250°C).
4. ALL FASTENER BOLTS,NUTS AND WASHERS SHOULD BE HT 10.9 CLASS.
5. QUANTITY OF SCREW JACK 4 NO.S
6. ASSEMBLE SCREW JACK TO STAND FOR METAL MOULD REF.DWG : 0127-1000TS-000-000

FOR QUOTATION PURPOSE ONLY

TITLE RVS - S3

DIMENSIONS IN MM EXCEPT NOTED

SCREW JACK FOR STAND

THIRD ANGLE PROJ.

SCALE 1:1 & NOTED

DWG. NO. 0127-1000TJ-000-000

SHT. 1 OF 1

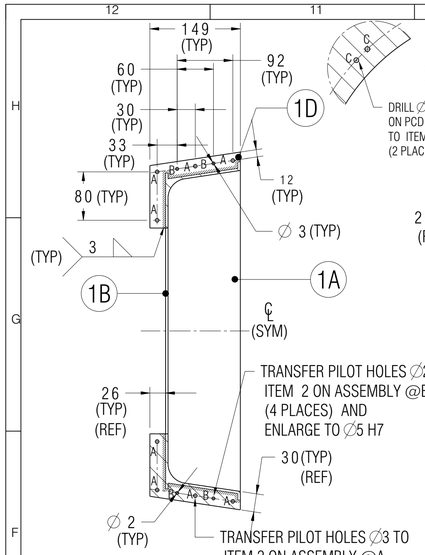

SECTION F-F

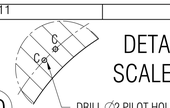

DETAIL K
SCALE:NTS

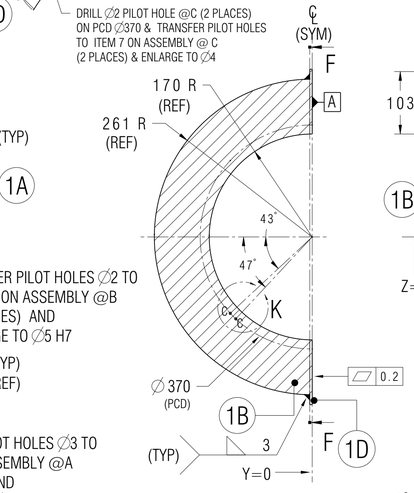

SECTION C-C

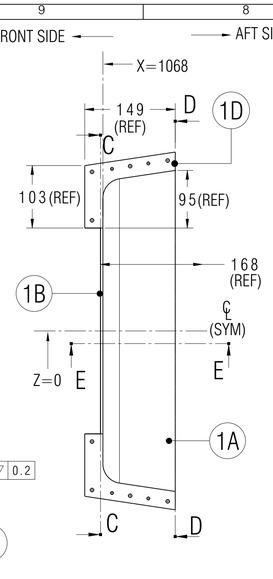

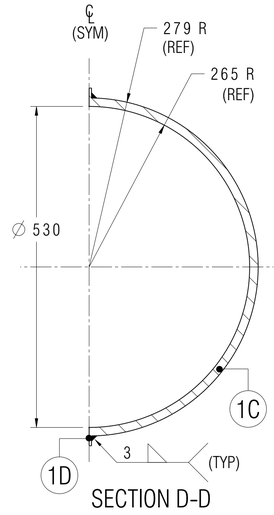

SECTION D-D

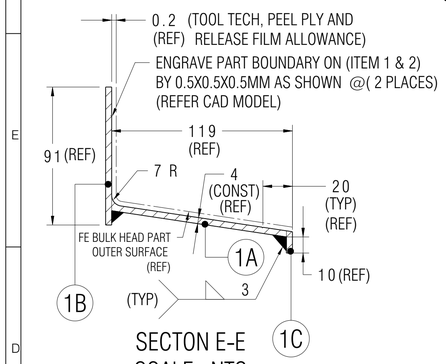

SECTON E-E
SCALE : NTS

DETAIL OF ITEM 1 & ITEM 2
B1 LAYUP TOOL-1 & 2

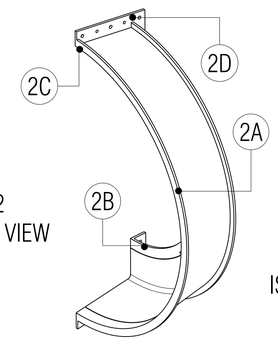

ITEM 2
ISOMETRIC VIEW

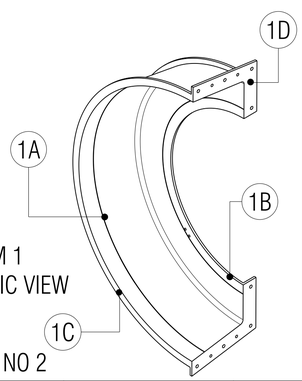

ITEM 1
ISOMETRIC VIEW

TABLE FOR ITEM NO 1 & ITEM NO 2

2C	2	1D	2	END FLANGE	SA 516 GRADE 70	REF. DETAIL DWG. TABLE	
2C	1	1C	1	SIDE FLANE-2	SA 516 GRADE 70	REF. DETAIL DWG. TABLE	
2B	1	1B	1	SIDE FLANGE-1	SA 516 GRADE 70	REF. DETAIL DWG. TABLE	
2A	1	1A	1	CENTRE MOULD	SA 516 GRADE 70	REF. DETAIL DWG. TABLE	
ITEM NO 2	QTY	ITEM NO 1	QTY	DESCRIPTION	MATERIAL	SPECIFICATIONS	REMARKS

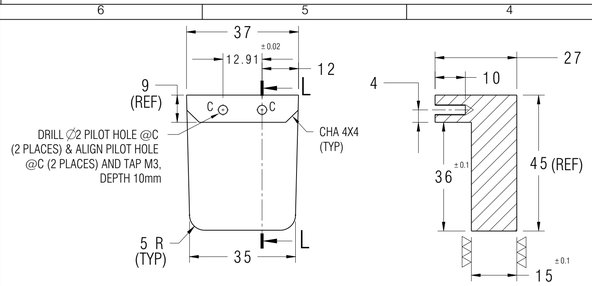

SECTION L-L

DETAIL OF ITEM 7

7	2	SPACER	SA 516 GRADE 70	65X60X30	
ITEM NO	QTY	DESCRIPTION	MATERIAL	STOCK SIZE(mm)	REMARKS

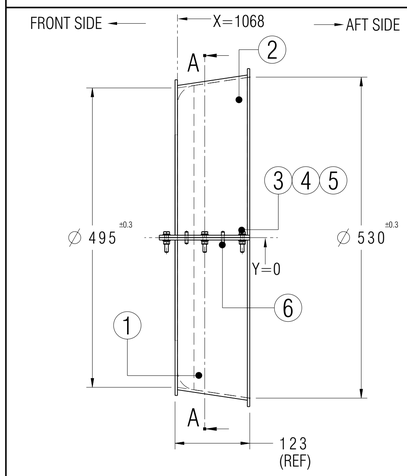

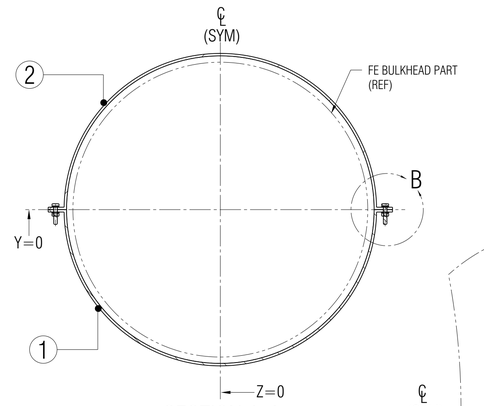

SECTION A-A

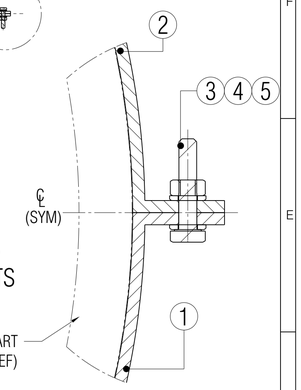

DETAIL B
SCALE : NTS

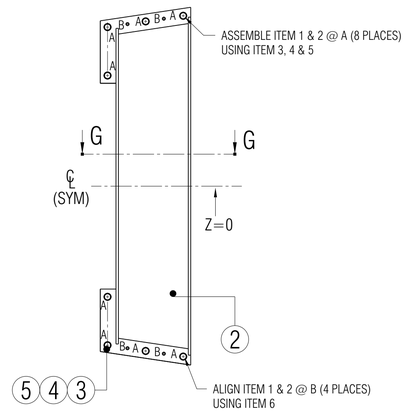

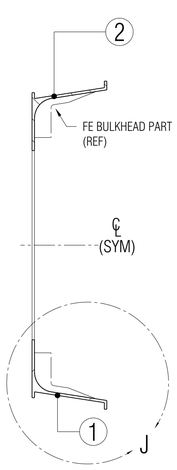

SECTION G-G

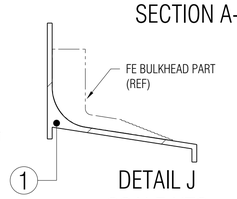

DETAIL J
SCALE:NTS

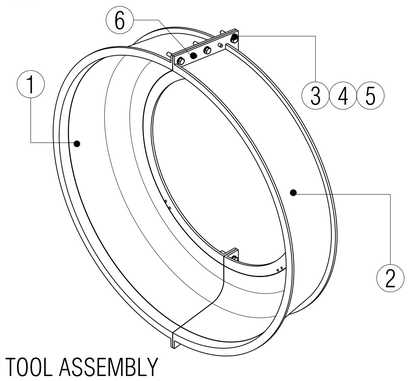

B1 LAYUP TOOL ASSEMBLY

8	4	M3 SCREW	STEEL	M3X15	HT 10.9 CLASS
7	2	SPACER	SA 516 GRADE 70	REF. DETAIL DWG. TABLE	
6	4	DOWEL PIN	CMS	∅5XL20	STD
5	16	WASHER	STEEL	ID6XOD12	HT 10.9 CLASS
4	8	M6 HEX NUT	STEEL	M6	HT 10.9 CLASS
3	8	M6 HEX BOLT	STEEL	M6X20	HT 10.9 CLASS
2	1	B1 LAYUP TOOL-2	SA 516 GRADE 70	REF. DETAIL DWG. TABLE	SYMMETRY OF ITEM 1
1	1	B1 LAYUP TOOL-1	SA 516 GRADE 70	REF. DETAIL DWG. TABLE	
ITEM NO	QTY	DESCRIPTION	MATERIALS	SPECIFICATION	REMARKS

NOTE:
1. FOR THEORETICAL CONTOUR NMG REFER CATIA MODEL NMG-RVS-S3- 0127 AND FOR STATION DIAGRAM REFER DWG NO. 0127-000S-000-000
2. TOOL CONTOUR OFFSET BY 0.2MM OUTSIDE FROM THE PART OUTER SURFACE FOR TOOL TECH AND PEEL PLY ALLOWANCES.
3. TOLERANCE ON ITEM 1 & 2 CONTOUR SURFACE IS ±0.15MM INDIVIDUALLY AND AFTER ASSEMBLY OF ITEM 1 & 2 THE TOLERANCE ON CONTOUR SURFACE IS ±0.3MM. INSPECT USING CMM/ LASER TRACKER.
4. IN ITEM 1 & ITEM 2 WELDING SHOULD BE LEAK PROOF WELDING, AND TO BE QUALIFIED BY RADIOGRAPHY/NDT.
5. ROUND OF ALL SHARP CORNERS AND EDGES BY 0.5R
6. STRESS RELIEVE THE TOOL AFTER FORMING, WELDING AND BEFORE FINAL MACHINING.
7. ALL MACHINED SURFACES/PLANES SHOULD BE HARD CHROME FINISH. (OTHER AREA TO BE PAINTED WITH HIGH TEMPERATURE SILVER PAINT TO WITHSTAND OPERATING TEMPERATURE OF 250°C)
8. ALL FASTENER BOLTS,NUTS AND WASHERS SHOULD BE HT 10.9 CLASS.
9. ACCEPTANCE OF VARIATION IN TOOL THICKNESS WITHIN ±1MM.
10. UNTOLERANCED DIMENSION CONFIRM TO IS 2102(PART-1)-COARSE.
11. MARK/TAG ON TOOL INDIVIDUALLY THUS

PROJECT - RVS - S3

TOOL NAME: LAYUP TOOL FOR BULKHEAD ASSEMBLY B1 (FE)
TOOL NO: 0127-1200TL-000-000
PART NAME: BULKHEAD ASSEMBLY B1 (FE)
PART NO: 0127-1200-000-0F0
TOOL CLEARED FOR INSPECTED DATE STAMP
SL NO.

FOR QUOTATION PURPOSE ONLY

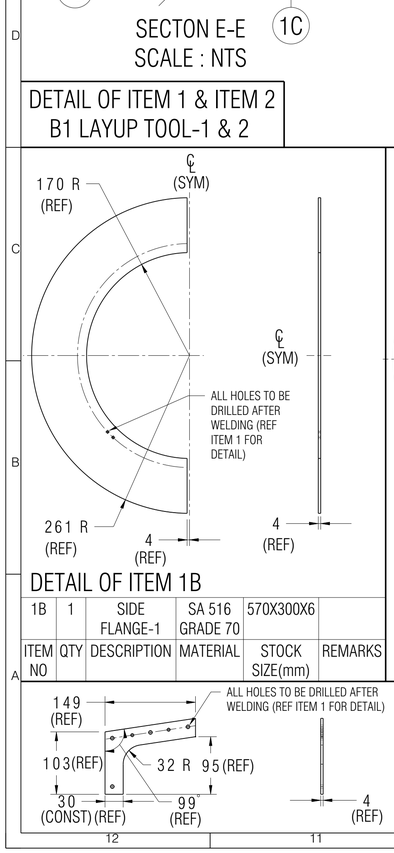

DETAIL OF ITEM 1B

1B	1	SIDE FLANGE-1	SA 516 GRADE 70	570X300X6	
ITEM NO	QTY	DESCRIPTION	MATERIAL	STOCK SIZE(mm)	REMARKS

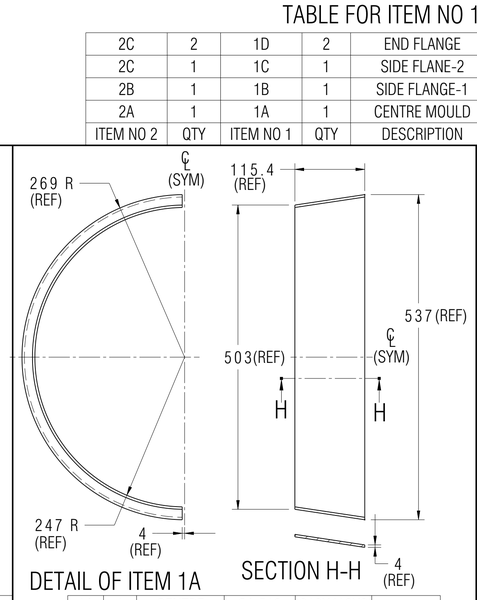

DETAIL OF ITEM 1A

SECTION H-H

1A	1	CENTRE MOULD	SA 516 GRADE 70	910X410X6	
ITEM NO	QTY	DESCRIPTION	MATERIAL	STOCK SIZE(mm)	REMARKS

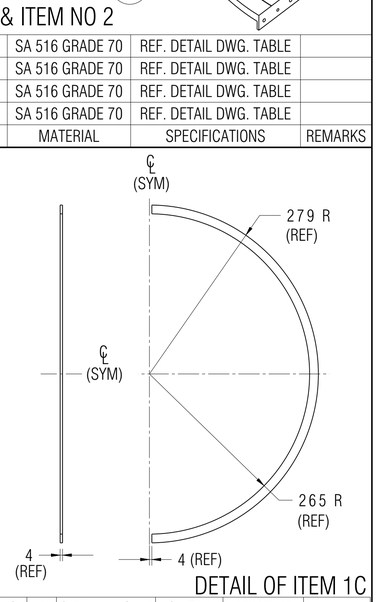

DETAIL OF ITEM 1C

1C	1	SIDE FLANGE-2	SA 516 GRADE 70	620X330X6	
ITEM NO	QTY	DESCRIPTION	MATERIAL	STOCK SIZE(mm)	REMARKS

DETAIL OF ITEM 1D

1D	2	END FLANGE	SA 516 GRADE 70	250X170X6	
ITEM NO	QTY	DESCRIPTION	MATERIAL	STOCK SIZE(mm)	REMARKS

TITLE RVS - S3

DIMENSIONS IN MM EXCEPT NOTED

LAYUP TOOL FOR
BULKHEAD ASSEMBLY B1 (FE)

THIRD ANGLE PROJ.

SCALE 1:5 & NOTED

DWG. NO. 0127-1200TL-000-000

SHT. 1 OF 1

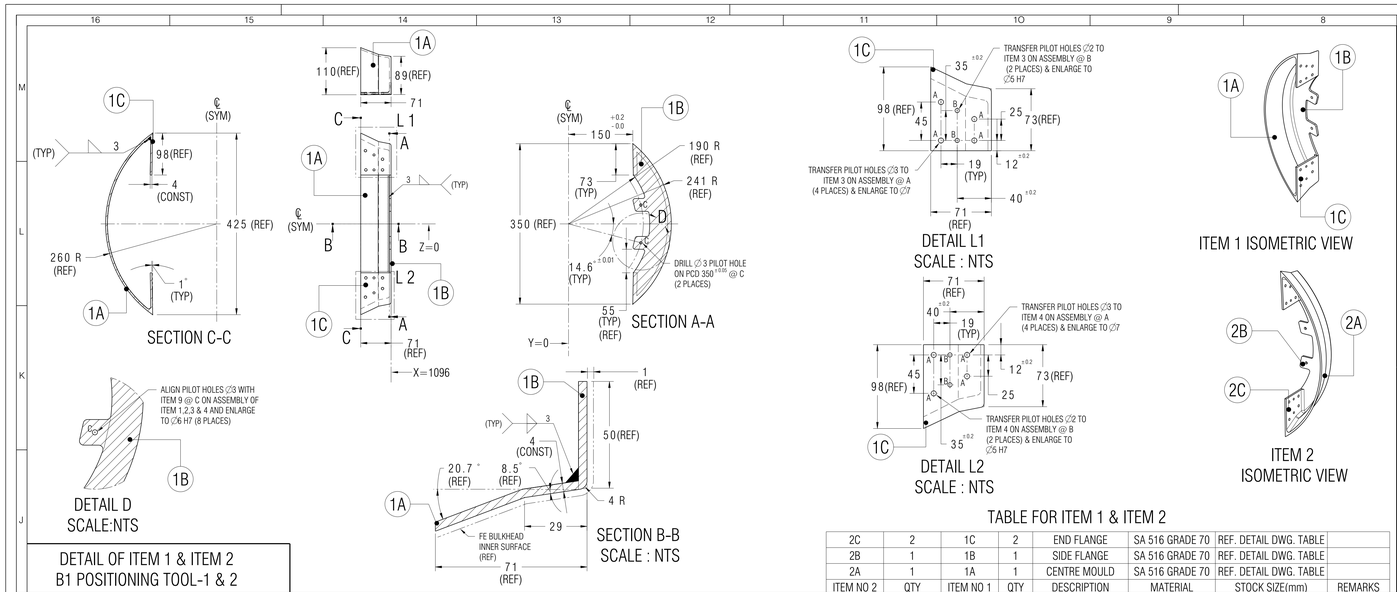

DETAIL OF ITEM 1 & ITEM 2
B1 POSITIONING TOOL-1 & 2

TABLE FOR ITEM 1 & ITEM 2

2C	2	1C	2	END FLANGE	SA 516 GRADE 70	REF. DETAIL DWG. TABLE	
2B	1	1B	1	SIDE FLANGE	SA 516 GRADE 70	REF. DETAIL DWG. TABLE	
2A	1	1A	1	CENTRE MOULD	SA 516 GRADE 70	REF. DETAIL DWG. TABLE	
ITEM NO 2	QTY	ITEM NO 1	QTY	DESCRIPTION	MATERIAL	STOCK SIZE(mm)	REMARKS

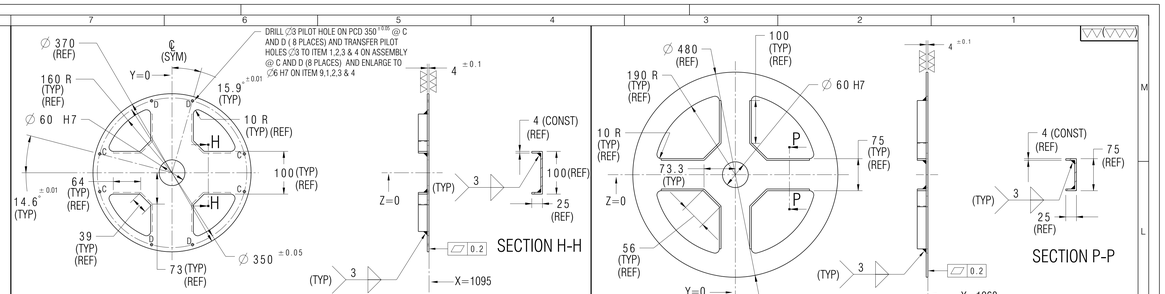

9	1	B1 SUPPORT PLATE-1	SA 516 GRADE 70	400X400X8	
ITEM NO	QTY	DESCRIPTION	MATERIAL	STOCK SIZE (mm)	REMARKS

10	1	B1 SUPPORT PLATE-2	SA 516 GRADE 70	500X500X8	
ITEM NO	QTY	DESCRIPTION	MATERIAL	STOCK SIZE (mm)	REMARKS

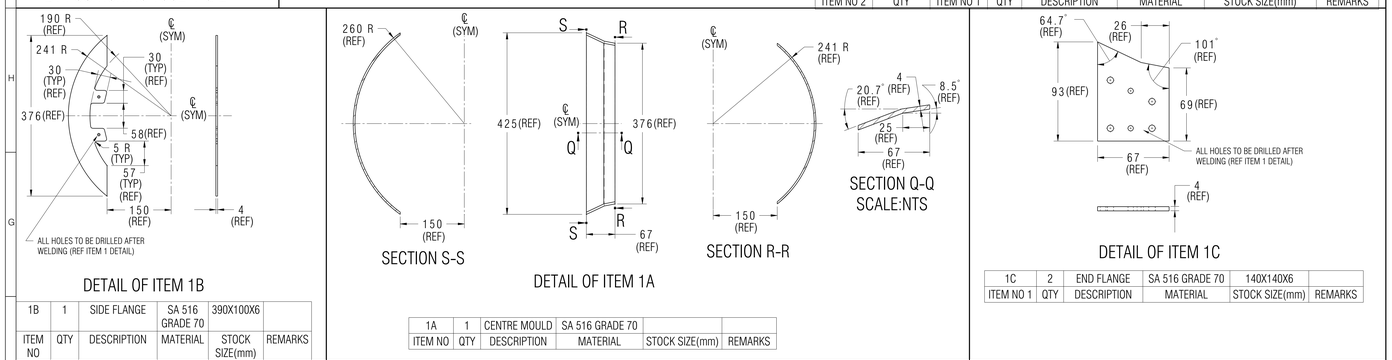

1B	1	SIDE FLANGE	SA 516 GRADE 70	390X100X6	
ITEM NO	QTY	DESCRIPTION	MATERIAL	STOCK SIZE(mm)	REMARKS

1A	1	CENTRE MOULD	SA 516 GRADE 70		
ITEM NO	QTY	DESCRIPTION	MATERIAL	STOCK SIZE(mm)	REMARKS

1C	2	END FLANGE	SA 516 GRADE 70	140X140X6	
ITEM NO 1	QTY	DESCRIPTION	MATERIAL	STOCK SIZE(mm)	REMARKS

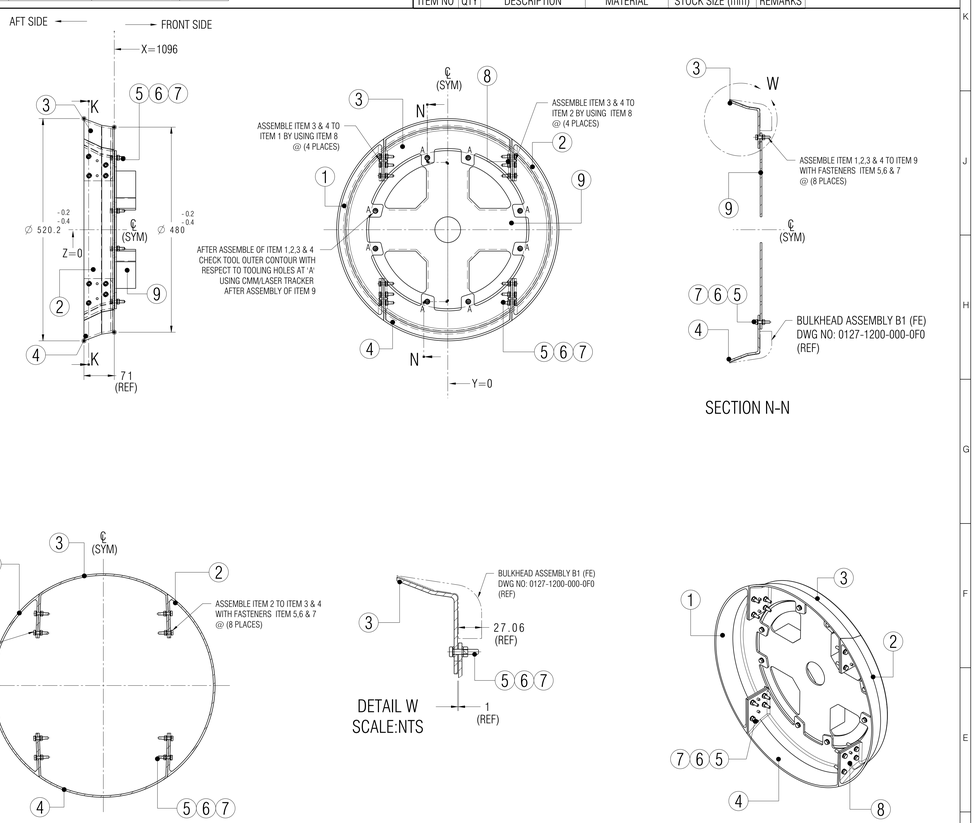

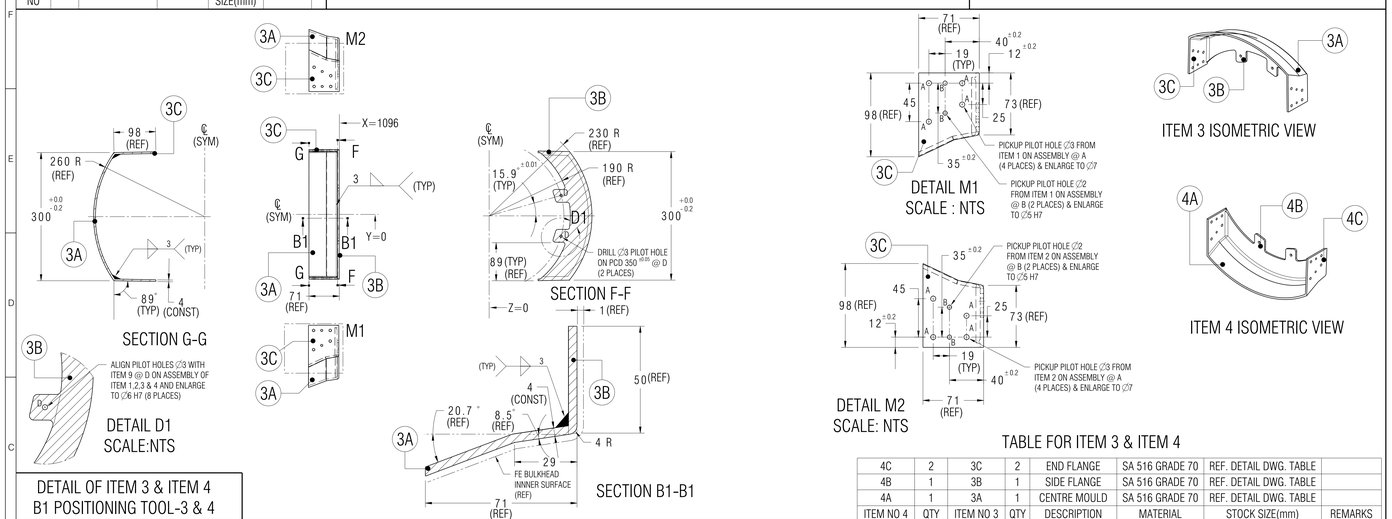

DETAIL OF ITEM 3 & ITEM 4
B1 POSITIONING TOOL-3 & 4

TABLE FOR ITEM 3 & ITEM 4

4C	2	3C	2	END FLANGE	SA 516 GRADE 70	REF. DETAIL DWG. TABLE	
4B	1	3B	1	SIDE FLANGE	SA 516 GRADE 70	REF. DETAIL DWG. TABLE	
4A	1	3A	1	CENTRE MOULD	SA 516 GRADE 70	REF. DETAIL DWG. TABLE	
ITEM NO 4	QTY	ITEM NO 3	QTY	DESCRIPTION	MATERIAL	STOCK SIZE(mm)	REMARKS

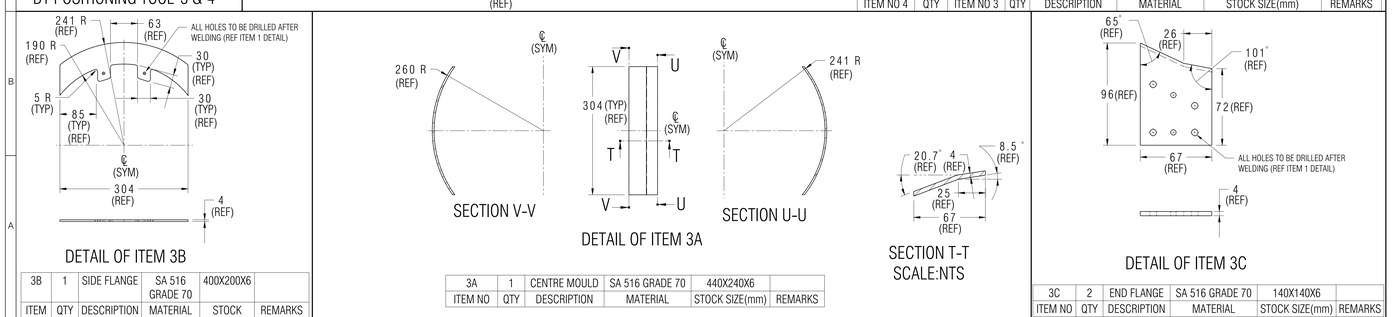

3B	1	SIDE FLANGE	SA 516 GRADE 70	400X200X6	
ITEM NO	QTY	DESCRIPTION	MATERIAL	STOCK SIZE(mm)	REMARKS

3A	1	CENTRE MOULD	SA 516 GRADE 70	440X240X6	
ITEM NO	QTY	DESCRIPTION	MATERIAL	STOCK SIZE(mm)	REMARKS

3C	2	END FLANGE	SA 516 GRADE 70	140X140X6	
ITEM NO	QTY	DESCRIPTION	MATERIAL	STOCK SIZE(mm)	REMARKS

NOTE:
1. FOR THEORETICAL CONTOUR NMG REFER CATIA MODEL NMG-RVS-S3- 0127 AND FOR STATION DIAGRAM REFER DWG NO. 0127-000S-000-000
2. TOOL CONTOUR OFFSET BY 1MM INSIDE FROM THE PART INNER SURFACE FOR TOOL TECH, PEEL PLY AND GREEN STAGE PART THICKNESS ALLOWANCES.
3. TOLERANCE ON ITEM 1, 2, 3 & 4 THE CONTOUR SURFACE IS ±0.15MM INDIVIDUALLY AND AFTER ASSEMBLY OF ITEM 1,2,3 & 4 THE TOLERANCE ON CONTOUR SURFACE IS ±0.3MM INSPECT USING CMM/ LASER TRACKER.
4. IN ITEM 1,2,3 & 4 WELDING SHOULD BE LEAK PROOF WELDING, AND TO BE QUALIFIED BY RADIOGRAPHY/ NDT.
5. ROUND OF ALL SHARP CORNERS AND EDGES BY 0.5R
6. STRESS RELIEVE THE TOOL AFTER FORMING, WELDING AND BEFORE FINAL MACHINING.
7. ALL MACHINED SURFACES/PLANES SHOULD BE HARD CHROME FINISH. (OTHER AREA TO BE PAINTED WITH HIGH TEMPERATURE SILVER PAINT TO WITHSTAND OPERATING TEMPERATURE OF 250°C)
8. ALL FASTENER BOLTS,NUTS AND WASHERS SHOULD BE HT 10.9 CLASS.
9. ACCEPTANCE OF VARIATION IN TOOL THICKNESS WITHIN ±1MM.
10. UNTOLERANCED DIMENSION CONFIRM TO IS 2102(PART-1)-COARSE.
11. MARK/TAG ON TOOL INDIVIDUALLY THUS

PROJECT - RVS - S3

TOOL NAME: POSITIONING TOOL FOR BULKHEAD ASSEMBLY B1 (FE)
TOOL NO: 0127-1200TP-000-000
PART NAME: BULKHEAD ASSEMBLY B1 (FE)
PART NO: 0127-1200-000-0F0
TOOL CLEARED FOR INSPECTED DATE STAMP
SL NO.

FOR QUOTATION PURPOSE ONLY

10	1	B1 SUPPORT PLATE-2	SA 516 GRADE 70	REF. DETAIL DWG. TABLE	
9	1	B1 SUPPORT PLATE-1	SA 516 GRADE 70	REF. DETAIL DWG. TABLE	
8	8	DOWEL PIN	CMS	∅5X20	STD
7	24	M6 HEX NUT	STEEL	M6	HT 10.9 CLASS
6	48	WASHER	STEEL	ID6XOD12	HT 10.9 CLASS
5	24	M6 HEX BOLT	STEEL	M6X20	HT 10.9 CLASS
4	1	B1 POSITIONING TOOL-4	SA 516 GRADE 70	REF. DETAIL DWG. TABLE	SYMMETRY OF ITEM 3
3	1	B1 POSITIONING TOOL-3	SA 516 GRADE 70	REF. DETAIL DWG. TABLE	
2	1	B1 POSITIONING TOOL-2	SA 516 GRADE 70	REF. DETAIL DWG. TABLE	SYMMETRY OF ITEM 1
1	1	B1 POSITIONING TOOL-1	SA 516 GRADE 70	REF. DETAIL DWG. TABLE	
ITEM NO	QTY	DESCRIPTION	MATERIALS	SPECFICATIONS	REMARKS

TITLE RVS - S3

DIMENSIONS IN MM EXCEPT NOTED

POSITIONING TOOL FOR
BULKHEAD ASSEMBLY B1 (FE)

THIRD ANGLE PROJ.

SCALE 1:5 & NOTED

DWG. NO. 0127-1200TP-000-000

SHT.1 OF 1

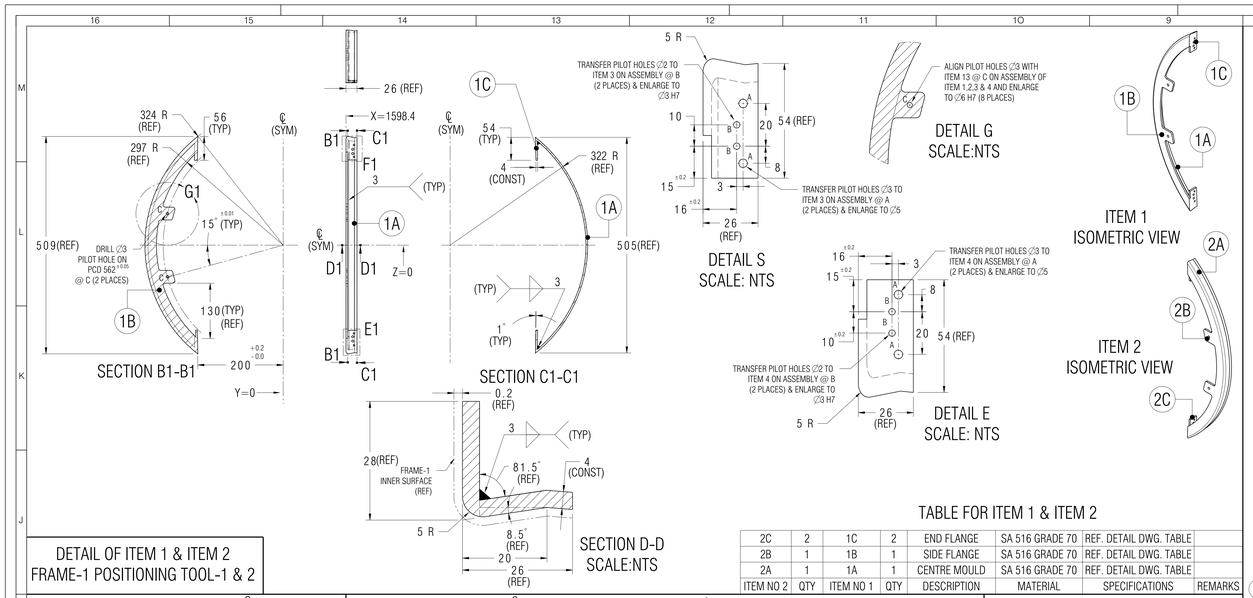

DETAIL OF ITEM 1 & ITEM 2
FRAME-1 POSITIONING TOOL-1 & 2

TABLE FOR ITEM 1 & ITEM 2

ITEM NO 2	QTY	ITEM NO 1	QTY	DESCRIPTION	MATERIAL	SPECIFICATIONS	REMARKS
2C	2	1C	2	END FLANGE	SA 516 GRADE 70	REF. DETAIL DWG. TABLE	
2B	1	1B	1	SIDE FLANGE	SA 516 GRADE 70	REF. DETAIL DWG. TABLE	
2A	1	1A	1	CENTRE MOULD	SA 516 GRADE 70	REF. DETAIL DWG. TABLE	

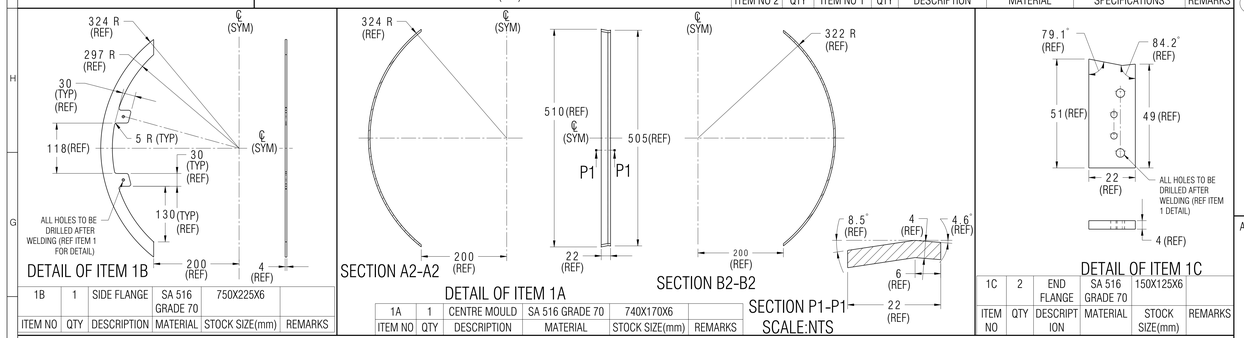

ITEM NO	QTY	DESCRIPTION	MATERIAL	STOCK SIZE(mm)	REMARKS
1B	1	SIDE FLANGE	SA 516 GRADE 70	750X225X6	

ITEM NO	QTY	DESCRIPTION	MATERIAL	STOCK SIZE(mm)	REMARKS
1A	1	CENTRE MOULD	SA 516 GRADE 70	740X170X6	

ITEM NO	QTY	DESCRIPTION	MATERIAL	STOCK SIZE(mm)	REMARKS
1C	2	END FLANGE	SA 516 GRADE 70	150X125X6	

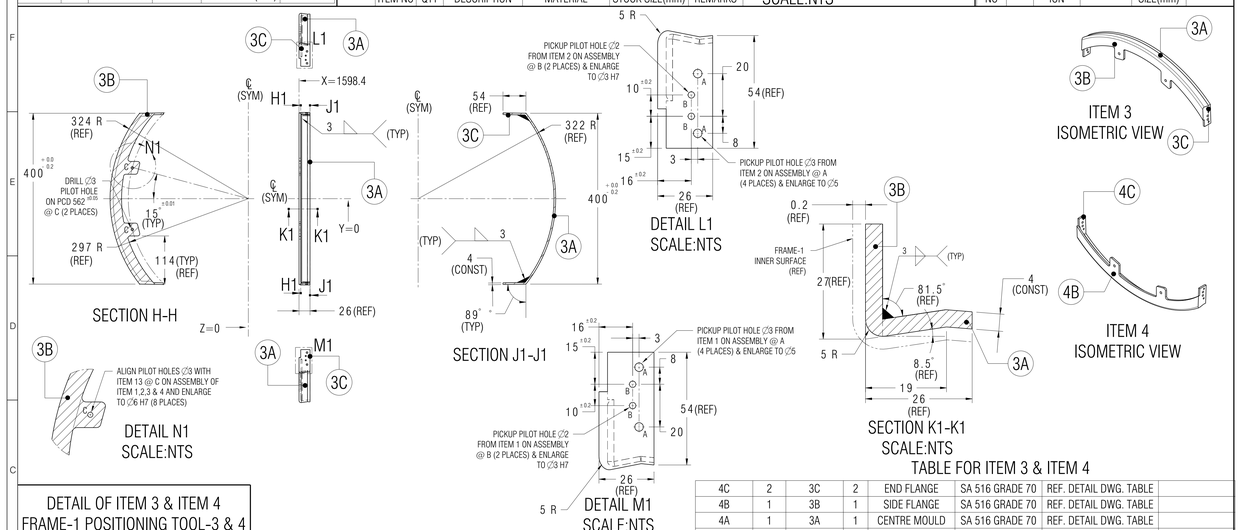

DETAIL OF ITEM 3 & ITEM 4
FRAME-1 POSITIONING TOOL-3 & 4

TABLE FOR ITEM 3 & ITEM 4

ITEM NO 4	QTY	ITEM NO 3	QTY	DESCRIPTION	MATERIAL	SPECIFICATIONS	REMARKS
4C	2	3C	2	END FLANGE	SA 516 GRADE 70	REF. DETAIL DWG. TABLE	
4B	1	3B	1	SIDE FLANGE	SA 516 GRADE 70	REF. DETAIL DWG. TABLE	
4A	1	3A	1	CENTRE MOULD	SA 516 GRADE 70	REF. DETAIL DWG. TABLE	

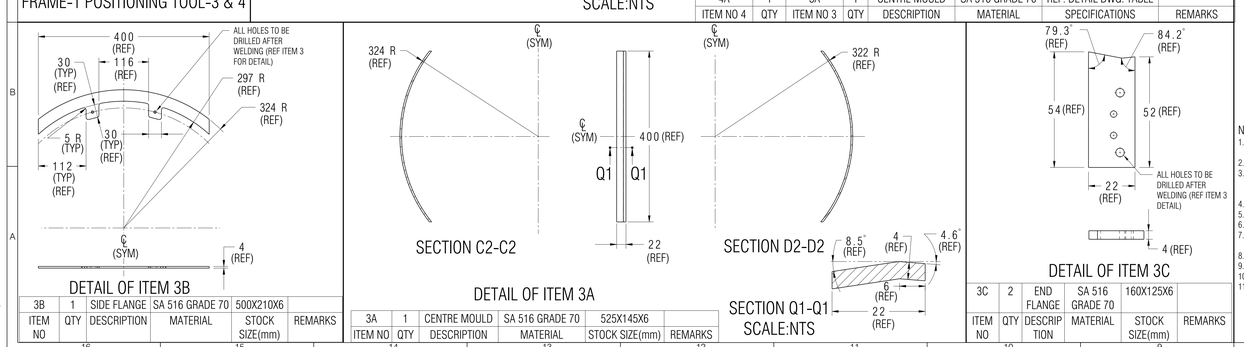

ITEM NO	QTY	DESCRIPTION	MATERIAL	STOCK SIZE(mm)	REMARKS
3B	1	SIDE FLANGE	SA 516 GRADE 70	500X210X6	

ITEM NO	QTY	DESCRIPTION	MATERIAL	STOCK SIZE(mm)	REMARKS
3A	1	CENTRE MOULD	SA 516 GRADE 70	525X145X6	

ITEM NO	QTY	DESCRIPTION	MATERIAL	STOCK SIZE(mm)	REMARKS
3C	2	END FLANGE	SA 516 GRADE 70	160X125X6	

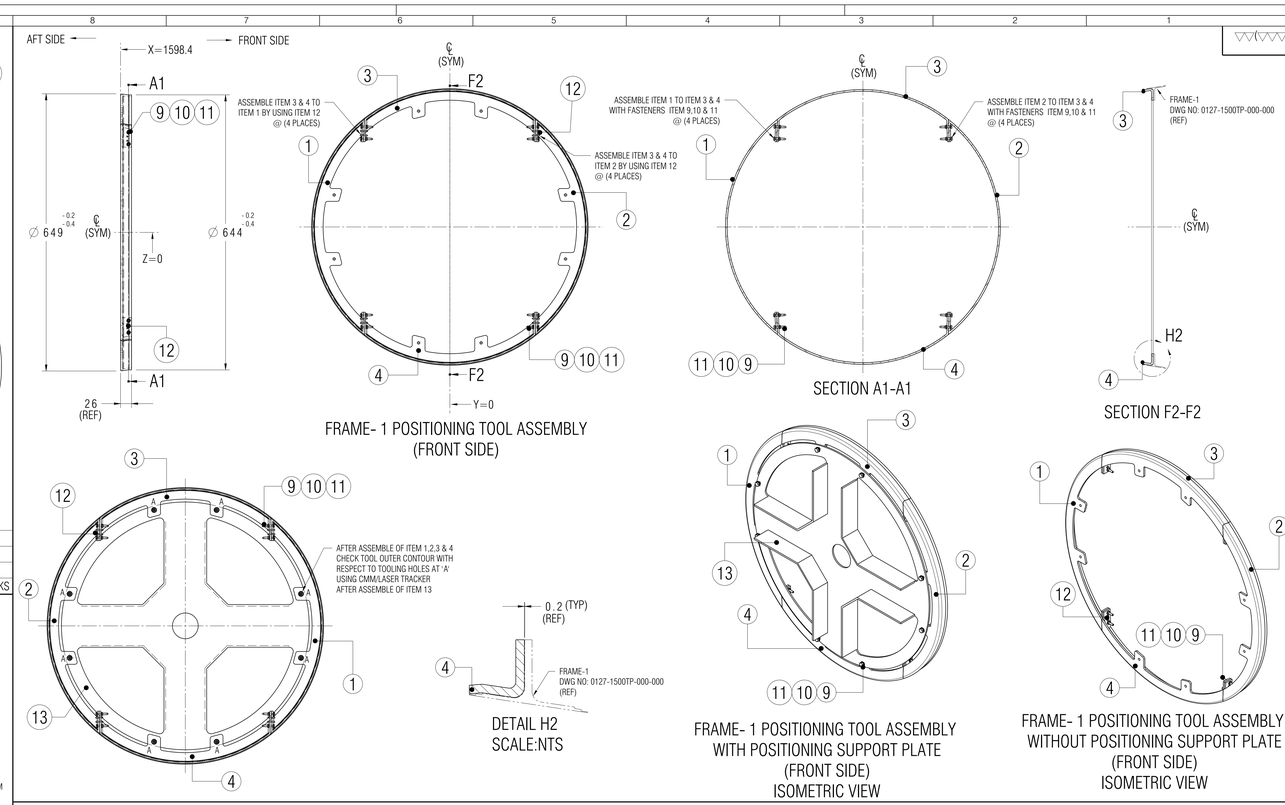

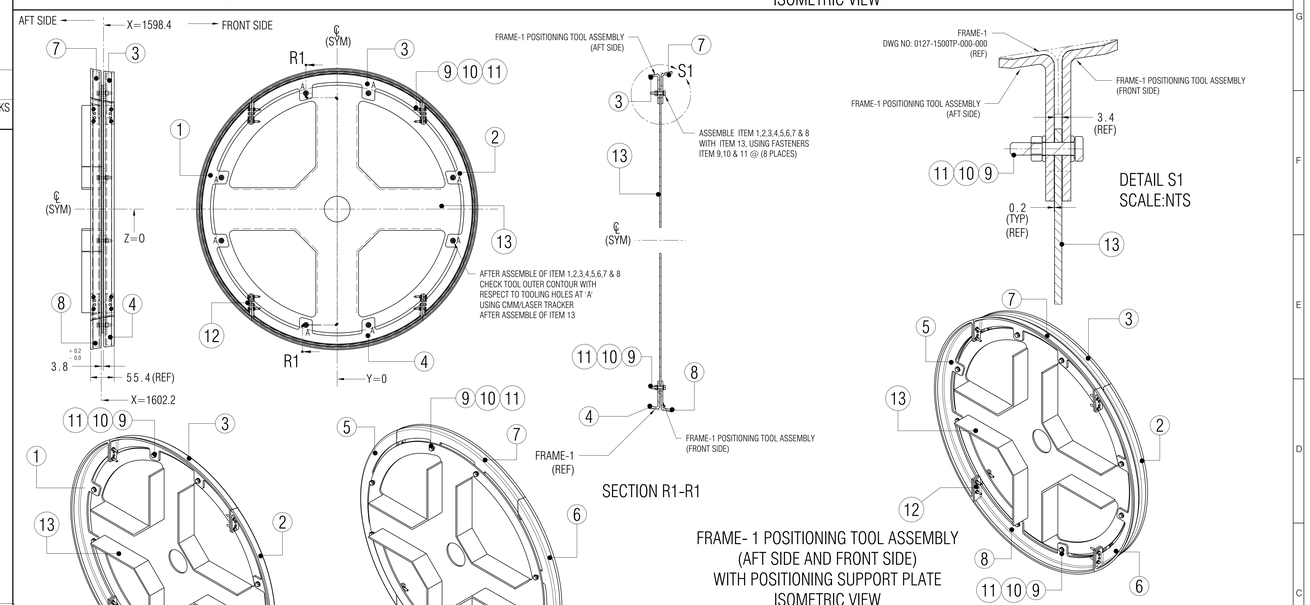

NOTE:
1. FOR THEORETICAL CONTOUR MMG REFER CATIA MODEL NMG-RVS-S3- 0127 AND FOR STATION DIAGRAM REFER DWG NO. 0127-000S-000-000
2. TOOL CONTOUR OFFSET BY 0.2MM INSIDE FROM THE PART INNER SURFACE FOR TOOL TECH,PEEL PLY ALLOWANCES.
3. TOLERANCE ON ITEM 1,2,3,4,5,6,7 & 8 THE CONTOUR SURFACE IS ±0.15MM INDIVIDUALLY AND AFTER ASSEMBLY OF ITEM 1,2,3, 4 & 13 AND ASSEMBLY OF ITEM 5,6,7,8 & 13. THE TOTAL TOLERANCE ON CONTOUR SURFACE IS ±0.3MM INSPECT USING CMM/LASER TRACKER.
4. IN ITEM 1,2,3 & 4 WELDING SHOULD BE LEAK PROOF WELDING, AND TO BE QUALIFIED BY RADIOGRAPHY/NDT.
5. ROUND OF ALL SHARP CORNERS AND EDGES BY 0.5R
6. STRESS RELIEVE THE TOOL AFTER FORMING, WELDING AND BEFORE FINAL MACHINING.
7. ALL MACHINED SURFACES/PLANES SHOULD BE HARD CHROME FINISH (OTHER AREA TO BE PAINTED WITH HIGH TEMPERATURE SILVER PAINT TO WITHSTAND OPERATING TEMPERATURE OF 250°C)
8. ALL FASTENER BOLTS,NUTS AND WASHERS SHOULD BE HT 10.9 CLASS.
9. ACCEPTANCE OF VARIATION IN TOOL THICKNESS WITHIN ±1MM.
10. UNTOLERANCED DIMENSION CONFIRM TO IS 2102(PART-1)-COARSE.
11. MARK/TAG ON TOOL INDIVIDUALLY THUS

PROJECT - RVS-S3

TOOL NAME: POSITIONING TOOL FOR FRAME-1 ASSEMBLY (FRONT SIDE)
TOOL NO: 0127-1500TP-000-000
PART NAME: FRAME-1
PART NO: 0127-1500-000-0F0
TOOL CLEARED FOR INSPECTED DATE STAMP
SL NO.

FOR QUOTATION PURPOSE ONLY

ITEM NO	QTY	DESCRIPTION	MATERIALS	SPECFICATIONS	REMARKS
13	1	FRAME-1 POSITIONING SUPPORT TOOL	SA 516 GRADE 70	REF. DETAIL DWG. TABLE	
12	8	DOWEL PIN	CMS	∅3X20	STD
11	24	M6 HEX NUT	STEEL	M4	HT 10.9 CLASS
10	48	WASHER	STEEL	ID4XOD8	HT 10.9 CLASS
9	24	M6 HEX BOLT	STEEL	M4X20	HT 10.9 CLASS
8	1	FRAME-1 POSITIONING TOOL-8 (AFT SIDE)	SA 516 GRADE 70	REF. DETAIL DWG. TABLE	SYMMETRY OF ITEM 7
7	1	FRAME-1 POSITIONING TOOL-7 (AFT SIDE)	SA 516 GRADE 70	REF. DETAIL DWG. TABLE	
6	1	FRAME-1 POSITIONING TOOL-6 (AFT SIDE)	SA 516 GRADE 70	REF. DETAIL DWG. TABLE	SYMMETRY OF ITEM 5
5	1	FRAME-1 POSITIONING TOOL-5 (AFT SIDE)	SA 516 GRADE 70	REF. DETAIL DWG. TABLE	
4	1	FRAME-1 POSITIONING TOOL-4 (FRONT SIDE)	SA 516 GRADE 70	REF. DETAIL DWG. TABLE	SYMMETRY OF ITEM 3
3	1	FRAME-1 POSITIONING TOOL-3 (FRONT SIDE)	SA 516 GRADE 70	REF. DETAIL DWG. TABLE	
2	1	FRAME-1 POSITIONING TOOL-2 (FRONT SIDE)	SA 516 GRADE 70	REF. DETAIL DWG. TABLE	SYMMETRY OF ITEM 1
1	1	FRAME-1 POSITIONING TOOL-1 (FRONT SIDE)	SA 516 GRADE 70	REF. DETAIL DWG. TABLE	

DIMENSIONS IN MM EXCEPT NOTED

TITLE RVS - S3

POSITION TOOL FOR
FRAME-1 ASSEMBLY

THIRD ANGLE PROJ. | SCALE 1:5 & NOTED | DWG. NO. 0127-1500TP-000-000 | SHT.1 OF 2

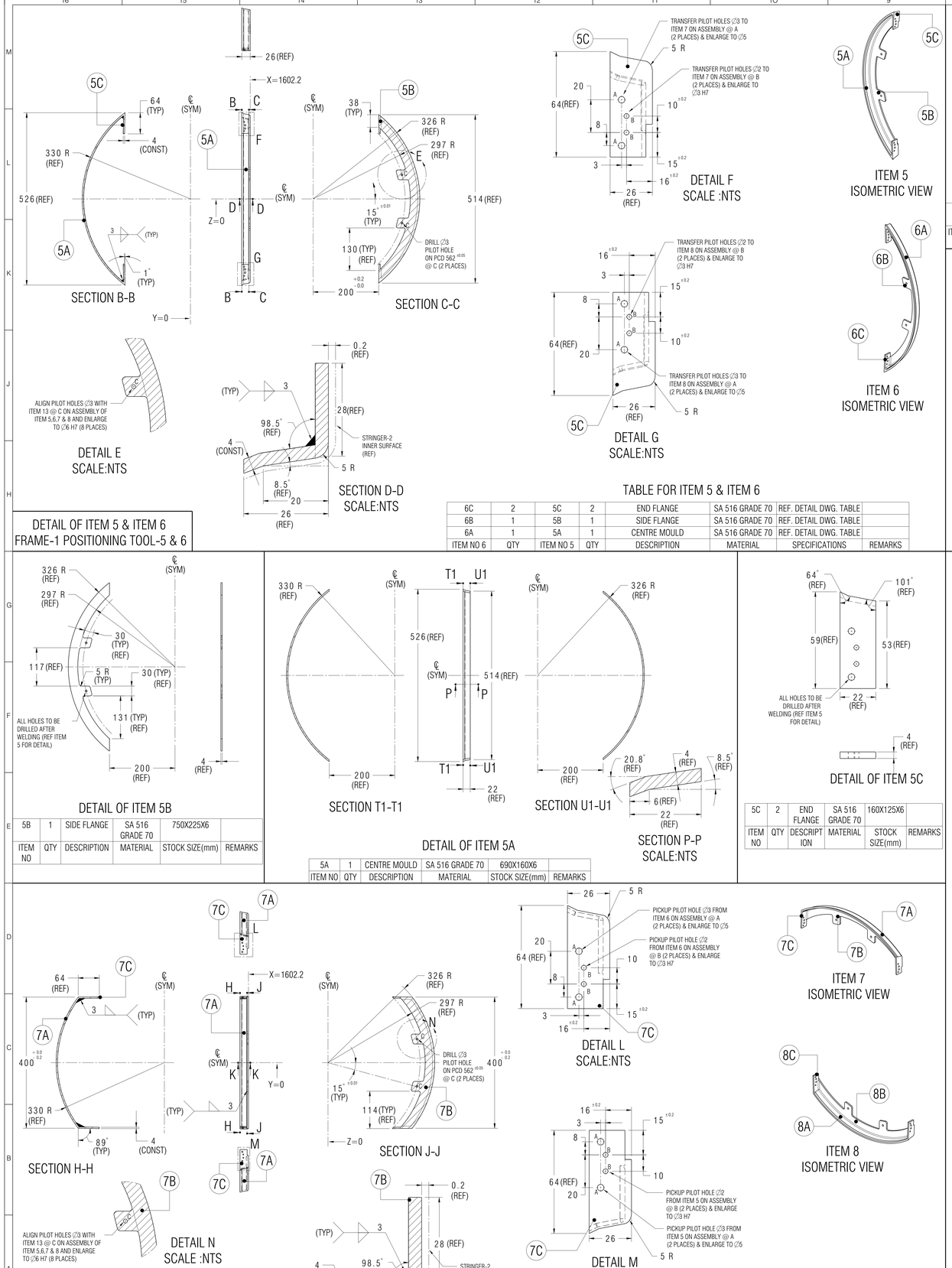

TABLE FOR ITEM 5 & ITEM 6

6C	2	5C	2	END FLANGE	SA 516 GRADE 70	REF. DETAIL DWG. TABLE	
6B	1	5B	1	SIDE FLANGE	SA 516 GRADE 70	REF. DETAIL DWG. TABLE	
6A	1	5A	1	CENTRE MOULD	SA 516 GRADE 70	REF. DETAIL DWG. TABLE	
ITEM NO 6	QTY	ITEM NO 5	QTY	DESCRIPTION	MATERIAL	SPECIFICATIONS	REMARKS

DETAIL OF ITEM 7B

7B	1	SIDE FLANGE	SA 516 GRADE 70	500X210X6	
ITEM NO	QTY	DESCRIPTION	MATERIAL	STOCK SIZE(mm)	REMARKS

DETAIL OF ITEM 7A

7C	2	END FLANGE	SA 516 GRADE 70	520X150X6	
ITEM NO	QTY	DESCRIPTION	MATERIAL	STOCK SIZE(mm)	REMARKS

DETAIL OF ITEM 7C

7C	2	END FLANGE	SA 516 GRADE 70	160X125X6	
ITEM NO	QTY	DESCRIPTION	MATERIAL	STOCK SIZE(mm)	REMARKS

13	1	FRAME-1 POSITIONING SUPPORT PLATE	SA 516 GRADE 70	630X630X6	
ITEM NO	QTY	DESCRIPTION	MATERIAL	STOCK SIZE (mm)	REMARKS

5B	1	SIDE FLANGE	SA 516 GRADE 70	750X225X6	
ITEM NO	QTY	DESCRIPTION	MATERIAL	STOCK SIZE(mm)	REMARKS

5A	1	CENTRE MOULD	SA 516 GRADE 70	690X160X6	
ITEM NO	QTY	DESCRIPTION	MATERIAL	STOCK SIZE(mm)	REMARKS

5C	2	END FLANGE	SA 516 GRADE 70	160X125X6	
ITEM NO	QTY	DESCRIPTION	MATERIAL	STOCK SIZE(mm)	REMARKS

TABLE FOR ITEM 7 & ITEM 8

8C	2	7C	2	END FLANGE	SA 516 GRADE 70	REF. DETAIL DWG. TABLE	
8B	1	7B	1	SIDE FLANGE	SA 516 GRADE 70	REF. DETAIL DWG. TABLE	
8A	1	7A	1	CENTRE MOULD	SA 516 GRADE 70	REF. DETAIL DWG. TABLE	
ITEM NO 8	QTY	ITEM NO 7	QTY	DESCRIPTION	MATERIAL	SPECIFICATIONS	REMARKS

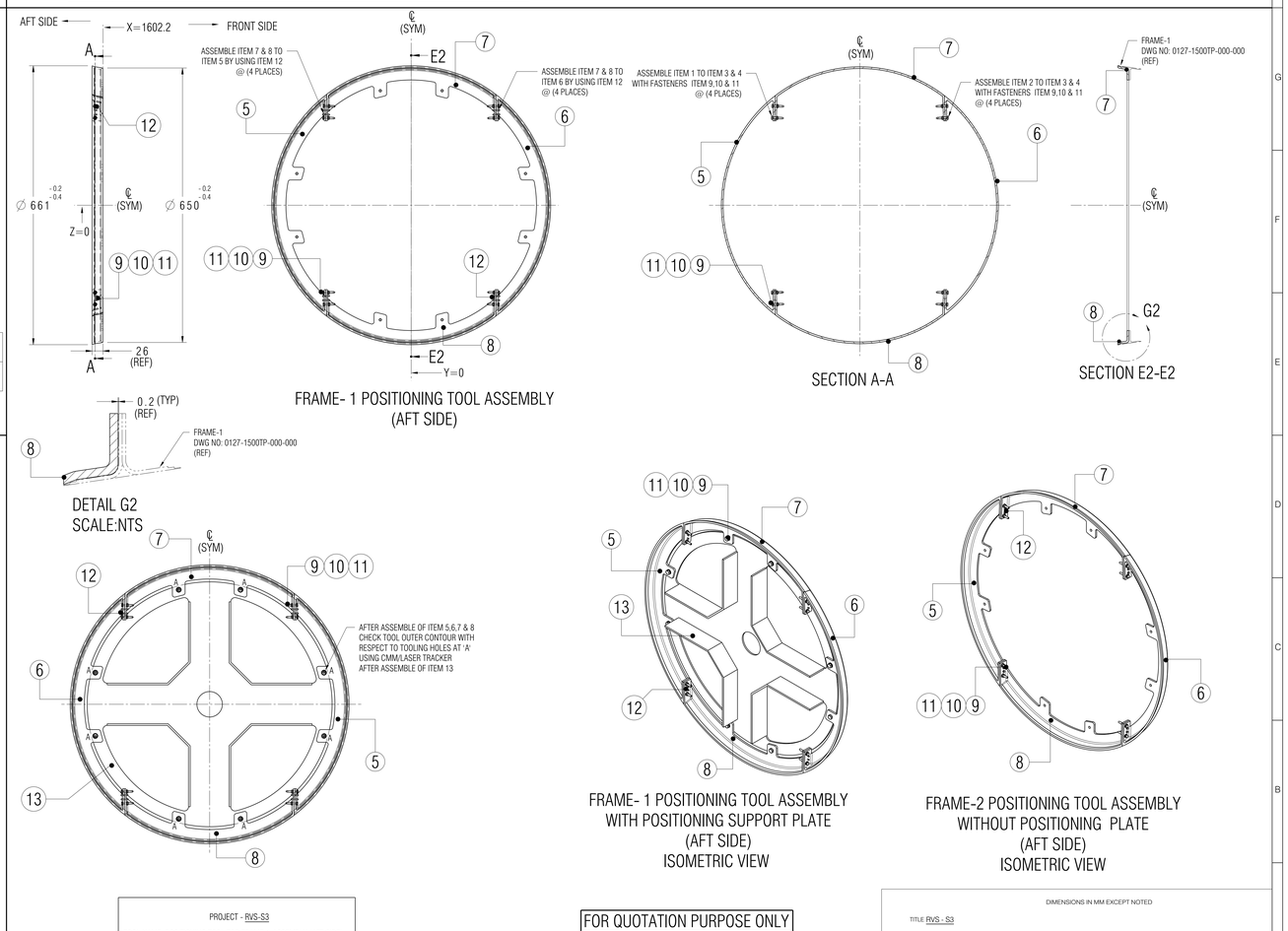

PROJECT - RVS-S3

TOOL NAME: POSITIONING TOOL FOR FRAME-1 ASSEMBLY (AFT SIDE)
TOOL NO: 0127-1500TP-000-000
PART NAME: FRAME-1
PART NO: 0127-1500-000-0F0
TOOL CLEARED FOR INSPECTED DATE STAMP
SL NO.

FOR QUOTATION PURPOSE ONLY

DIMENSIONS IN MM EXCEPT NOTED

TITLE RVS - S3

POSITION TOOL FOR
FRAME-1 ASSEMBLY

THIRD ANGLE PROJ. | SCALE 1:5 & NOTED | DWG. NO. 0127-1500TP-000-000 | SHT 2 OF 2

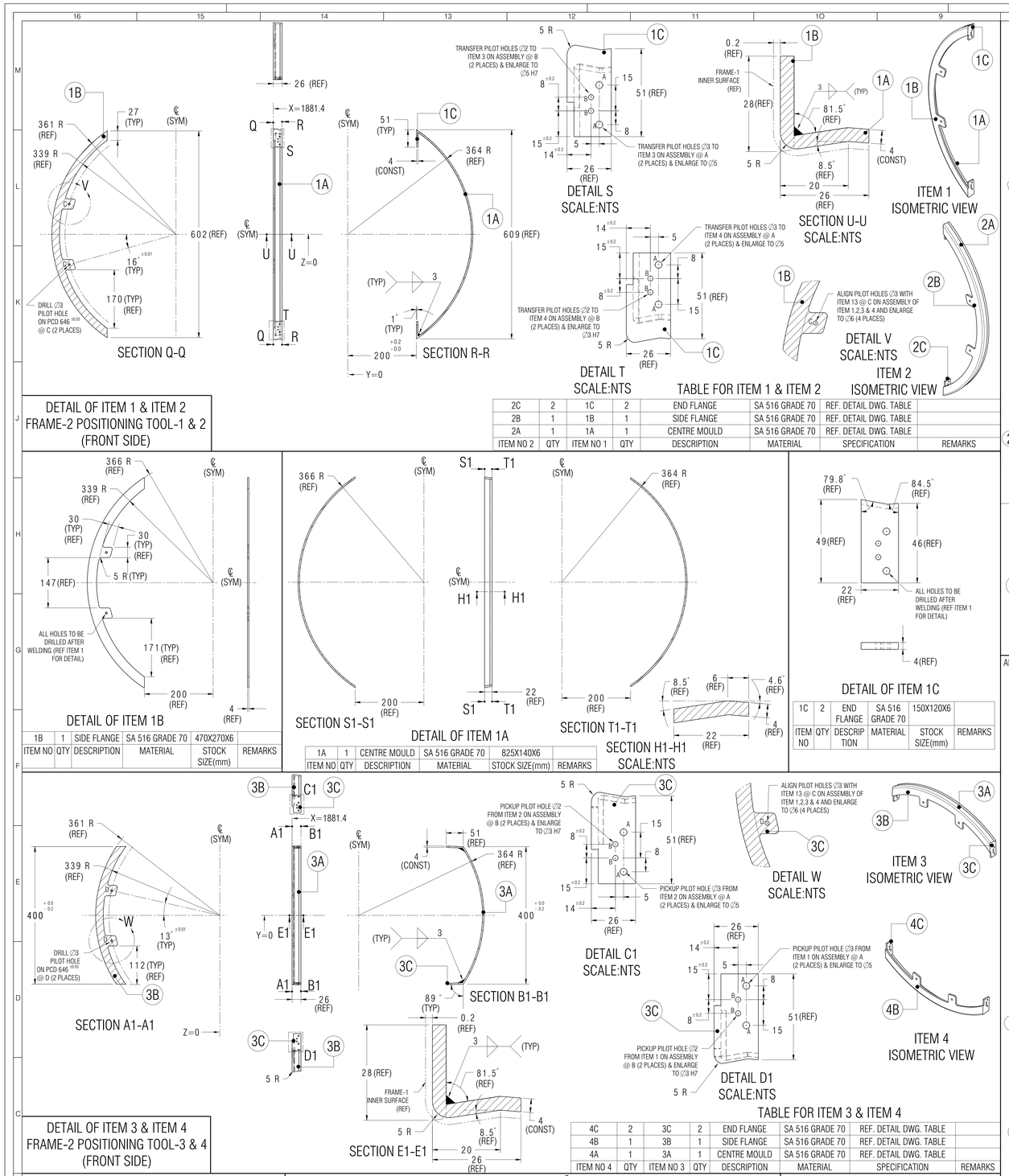

DETAIL OF ITEM 1 & ITEM 2
FRAME-2 POSITIONING TOOL-1 & 2
(FRONT SIDE)

TABLE FOR ITEM 1 & ITEM 2

ITEM NO 2	QTY	ITEM NO 1	QTY	DESCRIPTION	MATERIAL	SPECIFICATION	REMARKS
2C	2	1C	2	END FLANGE	SA 516 GRADE 70	REF. DETAIL DWG. TABLE	
2B	1	1B	1	SIDE FLANGE	SA 516 GRADE 70	REF. DETAIL DWG. TABLE	
2A	1	1A	1	CENTRE MOULD	SA 516 GRADE 70	REF. DETAIL DWG. TABLE	

ITEM NO	QTY	DESCRIPTION	MATERIAL	STOCK SIZE(mm)	REMARKS
1B	1	SIDE FLANGE	SA 516 GRADE 70	470X270X6	

ITEM NO	QTY	DESCRIPTION	MATERIAL	STOCK SIZE(mm)	REMARKS
1A	1	CENTRE MOULD	SA 516 GRADE 70	825X140X6	

ITEM NO	QTY	DESCRIP TION	MATERIAL	STOCK SIZE(mm)	REMARKS
1C	2	END FLANGE	SA 516 GRADE 70	150X120X6	

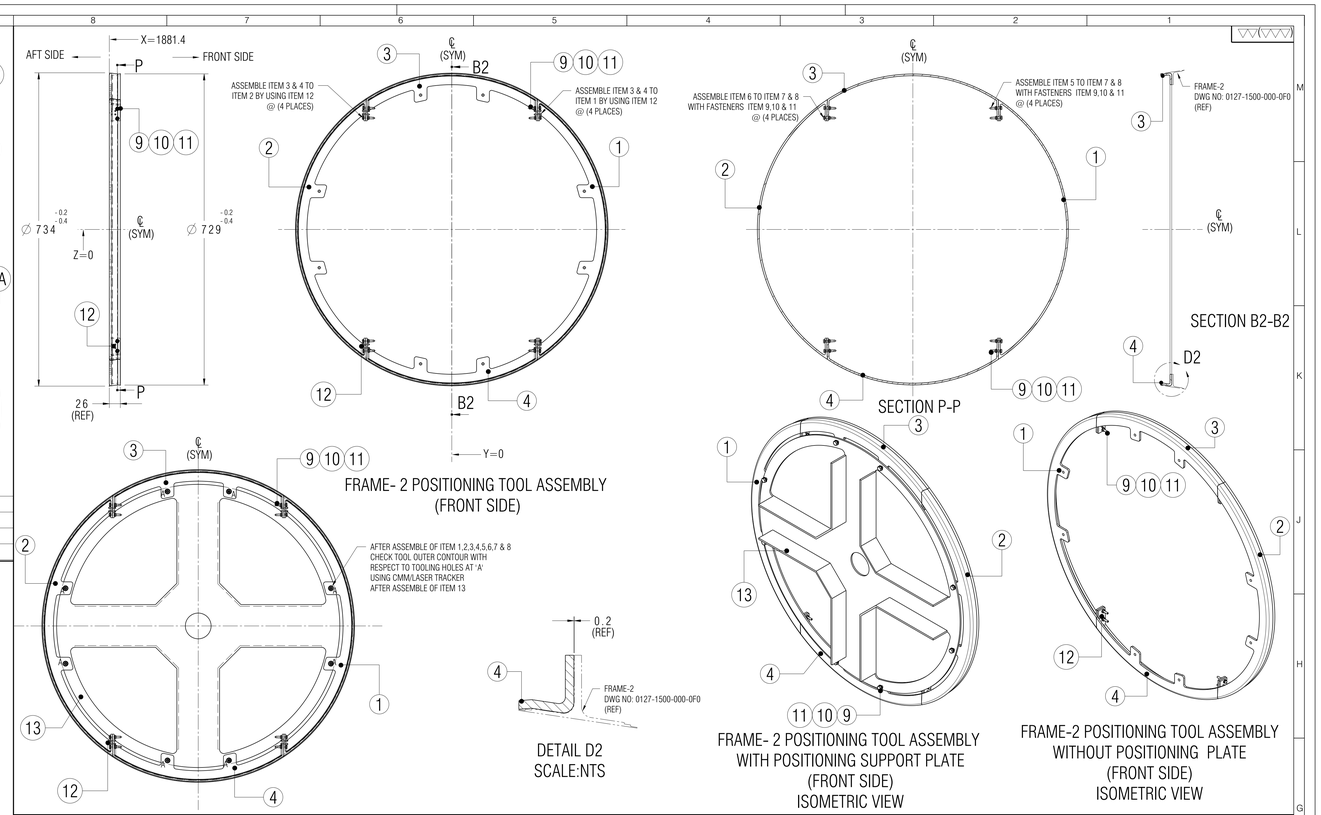

DETAIL OF ITEM 3 & ITEM 4
FRAME-2 POSITIONING TOOL-3 & 4
(FRONT SIDE)

TABLE FOR ITEM 3 & ITEM 4

ITEM NO 4	QTY	ITEM NO 3	QTY	DESCRIPTION	MATERIAL	SPECIFICATION	REMARKS
4C	2	3C	2	END FLANGE	SA 516 GRADE 70	REF. DETAIL DWG. TABLE	
4B	1	3B	1	SIDE FLANGE	SA 516 GRADE 70	REF. DETAIL DWG. TABLE	
4A	1	3A	1	CENTRE MOULD	SA 516 GRADE 70	REF. DETAIL DWG. TABLE	

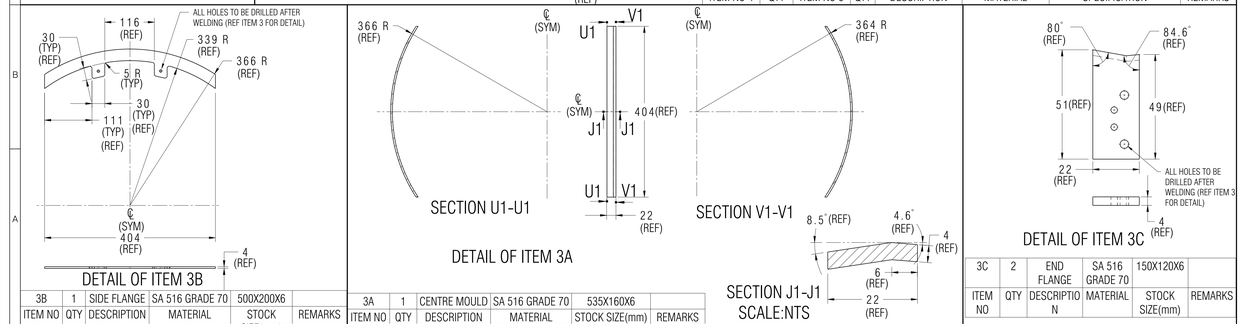

ITEM NO	QTY	DESCRIPTION	MATERIAL	STOCK SIZE(mm)	REMARKS
3B	1	SIDE FLANGE	SA 516 GRADE 70	500X200X6	

ITEM NO	QTY	DESCRIPTION	MATERIAL	STOCK SIZE(mm)	REMARKS
3A	1	CENTRE MOULD	SA 516 GRADE 70	535X160X6	

ITEM NO	QTY	DESCRIPTION	MATERIAL	STOCK SIZE(mm)	REMARKS
3C	2	END FLANGE	SA 516 GRADE 70	150X120X6	

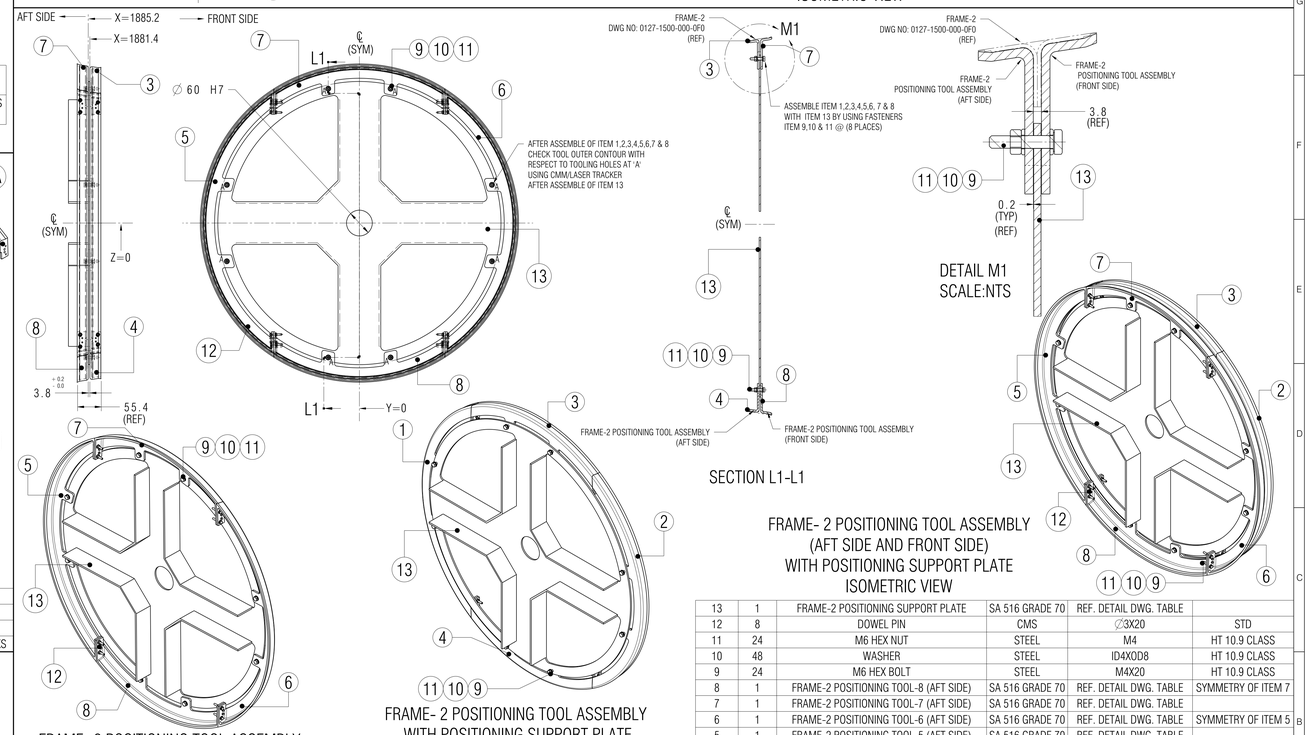

NOTE:
1. FOR THEORETICAL CONTOUR NMG REFER CATIA MODEL NMG-RVS-S3- 0127 AND FOR STATION DIAGRAM REFER DWG NO. 0127-0005-000-000.
2. TOOL CONTOUR OFFSET BY 0.2MM INSIDE FROM THE PART INNER SURFACE FOR TOOL TECH,PEEL PLY ALLOWANCES.
3. TOLERANCE ON ITEM 1, 2, 3 & 4 THE CONTOUR SURFACE IS ±0.15MM INDIVIDUALLY AND AFTER ASSEMBLY OF ITEM 1,2,3 & 4 THE TOLERANCE ON CONTOUR SURFACE IS ±0.3MM AND INSPECT USING CMM/ LASER TRACKER.
4. IN ITEM 1,2,3 & 4 WELDING SHOULD BE LEAK PROOF WELDING, AND TO BE QUALIFIED BY RADIOGRAPHY/NDT.
5. ROUND OF ALL SHARP CORNERS AND EDGES BY 0.5R
6. STRESS RELIEVE THE TOOL AFTER FORMING, WELDING AND BEFORE FINAL MACHINING.
7. ALL MACHINED SURFACES/PLANES SHOULD BE HARD CHROME FINISH (OTHER AREA TO BE PAINTED WITH HIGH TEMPERATURE SILVER PAINT TO WITHSTAND OPERATING TEMPERATURE OF 250°C).
8. ALL FASTENER BOLTS,NUTS AND WASHERS SHOULD BE HT 10.9 CLASS.
9. ACCEPTANCE OF VARIATION IN TOOL THICKNESS WITHIN ±1MM.
10. UNTOLERANCED DIMENSION CONFIRM TO IS 2102(PART-1)-COARSE.
11. MARK/TAG ON TOOL INDIVIDUALLY THUS

PROJECT - RVS-S3

TOOL NAME: POSITIONING TOOL FOR FRAME-2 ASSEMBLY (FRONT SIDE)
TOOL NO: 0127-1600TP-000-000
PART NAME: FRAME-2
PART NO: 0127-1600-000-0F0
TOOL CLEARED FOR INSPECTED DATE STAMP
SL NO.

REF FOR QUOTATION PURPOSE ONLY

ITEM NO	QTY	DESCRIPTION	MATERIALS	SPECFICATIONS	REMARKS
13	1	FRAME-2 POSITIONING SUPPORT PLATE	SA 516 GRADE 70	REF. DETAIL DWG. TABLE	
12	8	DOWEL PIN	CMS	∅3X20	STD
11	24	M6 HEX NUT	STEEL	M4	HT 10.9 CLASS
10	48	WASHER	STEEL	ID4X0D8	HT 10.9 CLASS
9	24	M6 HEX BOLT	STEEL	M4X20	HT 10.9 CLASS
8	1	FRAME-2 POSITIONING TOOL-8 (AFT SIDE)	SA 516 GRADE 70	REF. DETAIL DWG. TABLE	SYMMETRY OF ITEM 7
7	1	FRAME-2 POSITIONING TOOL-7 (AFT SIDE)	SA 516 GRADE 70	REF. DETAIL DWG. TABLE	
6	1	FRAME-2 POSITIONING TOOL-6 (AFT SIDE)	SA 516 GRADE 70	REF. DETAIL DWG. TABLE	SYMMETRY OF ITEM 5
5	1	FRAME-2 POSITIONING TOOL-5 (AFT SIDE)	SA 516 GRADE 70	REF. DETAIL DWG. TABLE	
4	1	FRAME-2 POSITIONING TOOL-4 (FRONT SIDE)	SA 516 GRADE 70	REF. DETAIL DWG. TABLE	SYMMETRY OF ITEM 3
3	1	FRAME-2 POSITIONING TOOL-3 (FRONT SIDE)	SA 516 GRADE 70	REF. DETAIL DWG. TABLE	
2	1	FRAME-2 POSITIONING TOOL-2 (FRONT SIDE)	SA 516 GRADE 70	REF. DETAIL DWG. TABLE	SYMMETRY OF ITEM 1
1	1	FRAME-2 POSITIONING TOOL-1 (FRONT SIDE)	SA 516 GRADE 70	REF. DETAIL DWG. TABLE	

DIMENSIONS IN MM EXCEPT NOTED

TITLE RVS - S3

POSITIONING TOOL FOR FRAME-2 ASSEMBLY

THIRD ANGLE PROJ.

SCALE 1:5 & NOTED

DWG. NO. 0127-1600TP-000-000

SHT. 1 OF 2

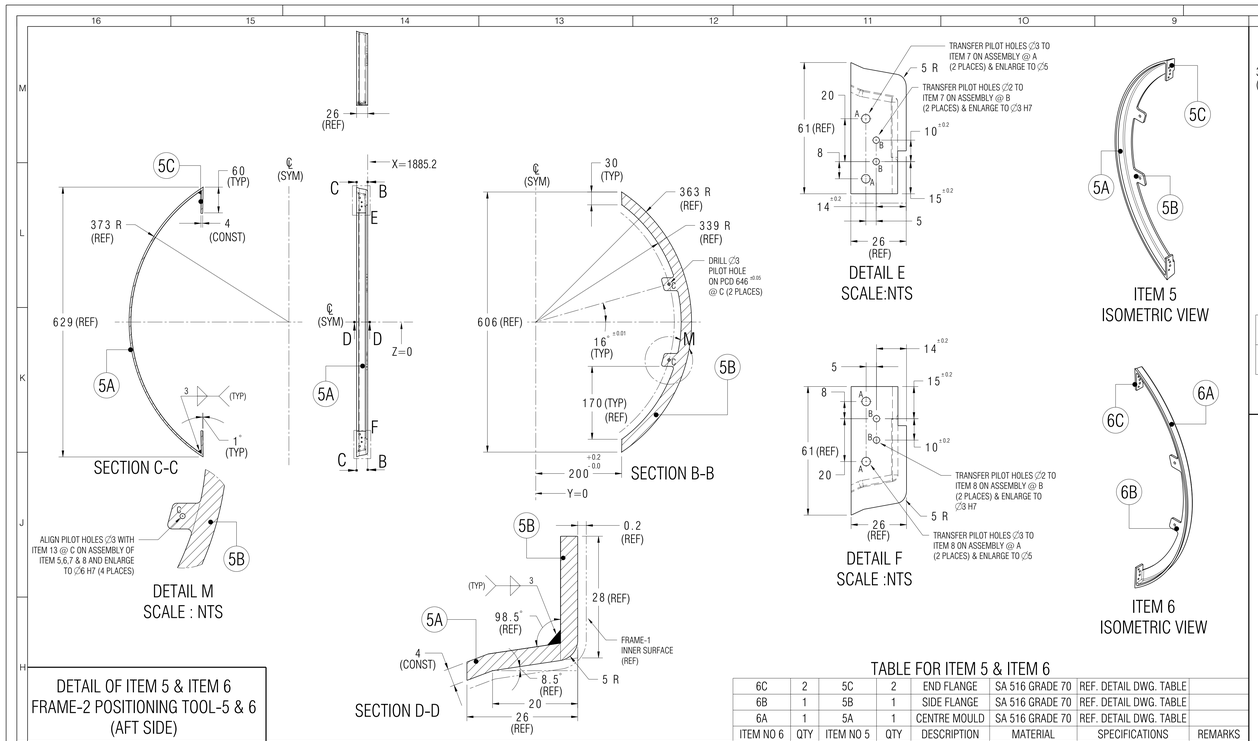

DETAIL OF ITEM 5 & ITEM 6
FRAME-2 POSITIONING TOOL-5 & 6
(AFT SIDE)

TABLE FOR ITEM 5 & ITEM 6

ITEM NO 6	QTY	ITEM NO 5	QTY	DESCRIPTION	MATERIAL	SPECIFICATIONS	REMARKS
6C	2	5C	2	END FLANGE	SA 516 GRADE 70	REF. DETAIL DWG. TABLE	
6B	1	5B	1	SIDE FLANGE	SA 516 GRADE 70	REF. DETAIL DWG. TABLE	
6A	1	5A	1	CENTRE MOULD	SA 516 GRADE 70	REF. DETAIL DWG. TABLE	

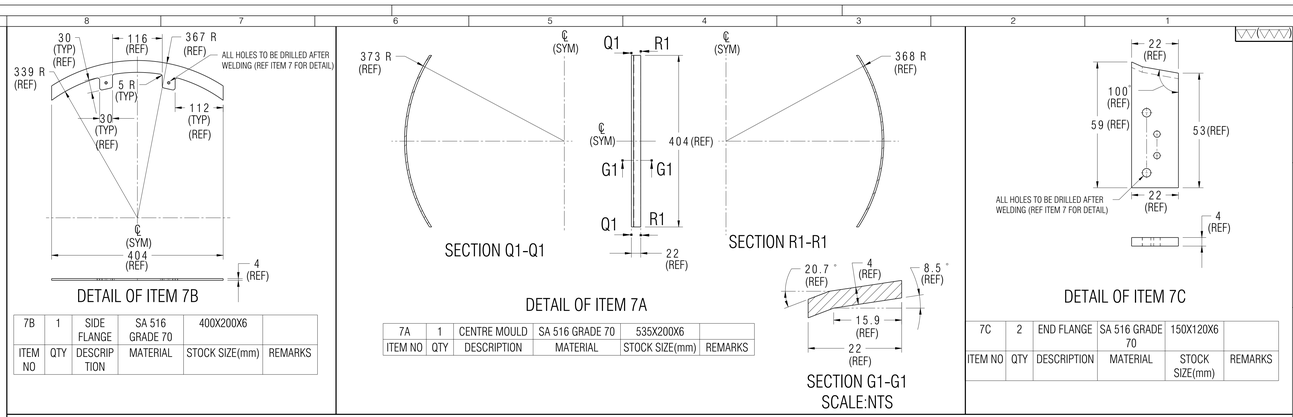

ITEM NO	QTY	DESCRIPTION	MATERIAL	STOCK SIZE(mm)	REMARKS
7B	1	SIDE FLANGE	SA 516 GRADE 70	400X200X6	

ITEM NO	QTY	DESCRIPTION	MATERIAL	STOCK SIZE(mm)	REMARKS
7A	1	CENTRE MOULD	SA 516 GRADE 70	535X200X6	

ITEM NO	QTY	DESCRIPTION	MATERIAL	STOCK SIZE(mm)	REMARKS
7C	2	END FLANGE	SA 516 GRADE 70	150X120X6	

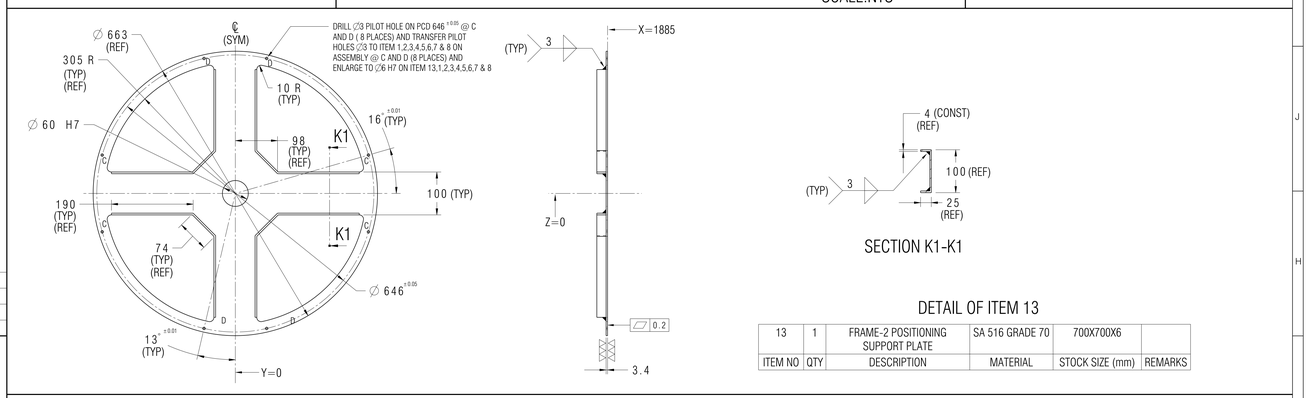

DETAIL OF ITEM 13

ITEM NO	QTY	DESCRIPTION	MATERIAL	STOCK SIZE (mm)	REMARKS
13	1	FRAME-2 POSITIONING SUPPORT PLATE	SA 516 GRADE 70	700X700X6	

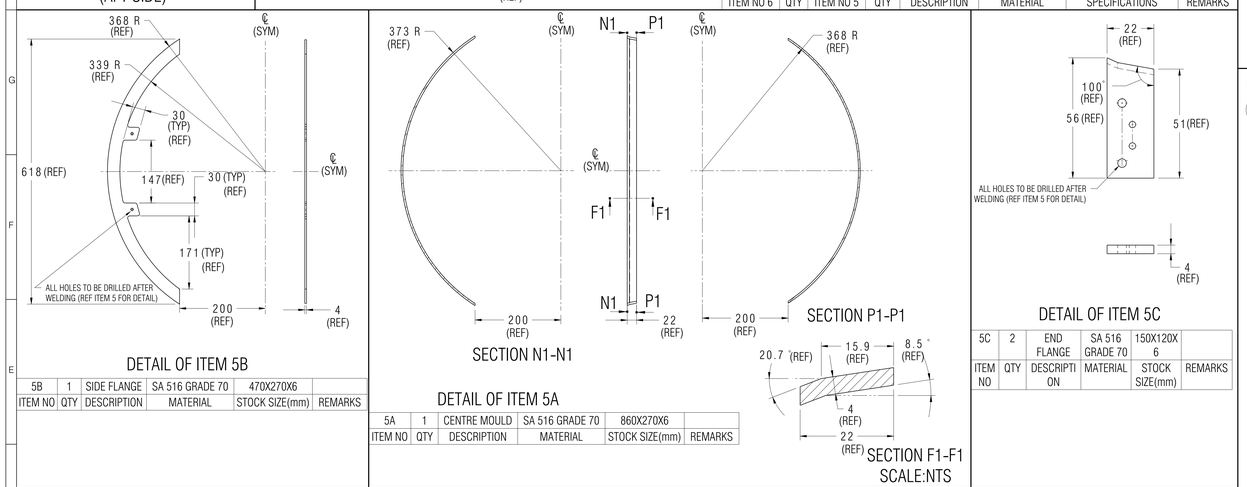

ITEM NO	QTY	DESCRIPTION	MATERIAL	STOCK SIZE(mm)	REMARKS
5B	1	SIDE FLANGE	SA 516 GRADE 70	470X270X6	

ITEM NO	QTY	DESCRIPTION	MATERIAL	STOCK SIZE(mm)	REMARKS
5A	1	CENTRE MOULD	SA 516 GRADE 70	860X270X6	

ITEM NO	QTY	DESCRIPTION	MATERIAL	STOCK SIZE(mm)	REMARKS
5C	2	END FLANGE	SA 516 GRADE 70	150X120X6	

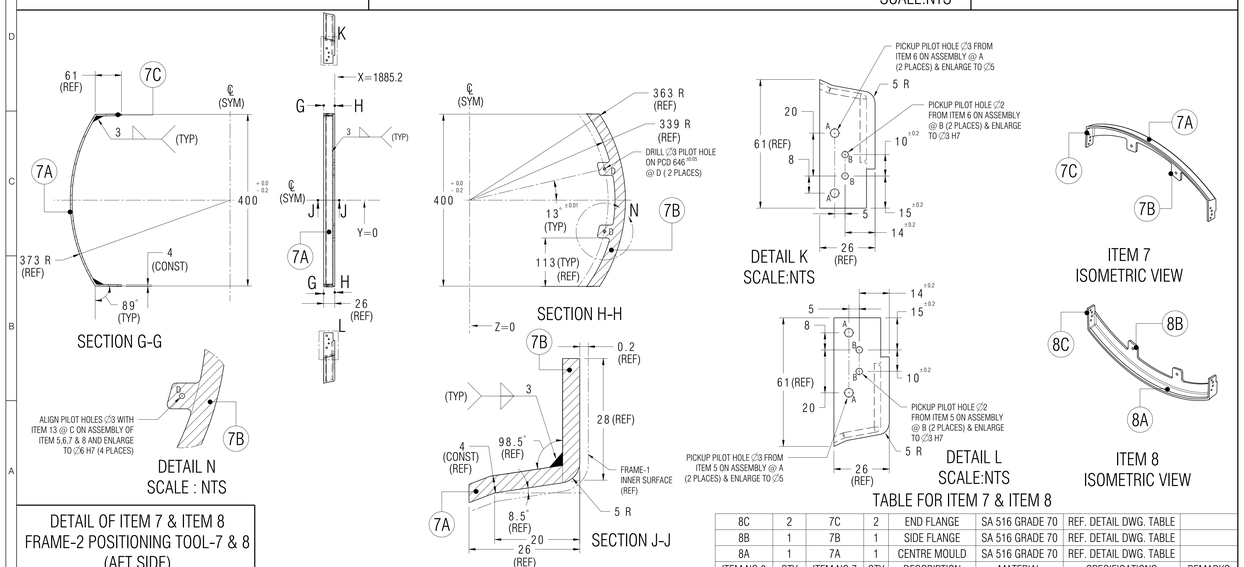

DETAIL OF ITEM 7 & ITEM 8
FRAME-2 POSITIONING TOOL-7 & 8
(AFT SIDE)

TABLE FOR ITEM 7 & ITEM 8

ITEM NO 8	QTY	ITEM NO 7	QTY	DESCRIPTION	MATERIAL	SPECIFICATIONS	REMARKS
8C	2	7C	2	END FLANGE	SA 516 GRADE 70	REF. DETAIL DWG. TABLE	
8B	1	7B	1	SIDE FLANGE	SA 516 GRADE 70	REF. DETAIL DWG. TABLE	
8A	1	7A	1	CENTRE MOULD	SA 516 GRADE 70	REF. DETAIL DWG. TABLE	

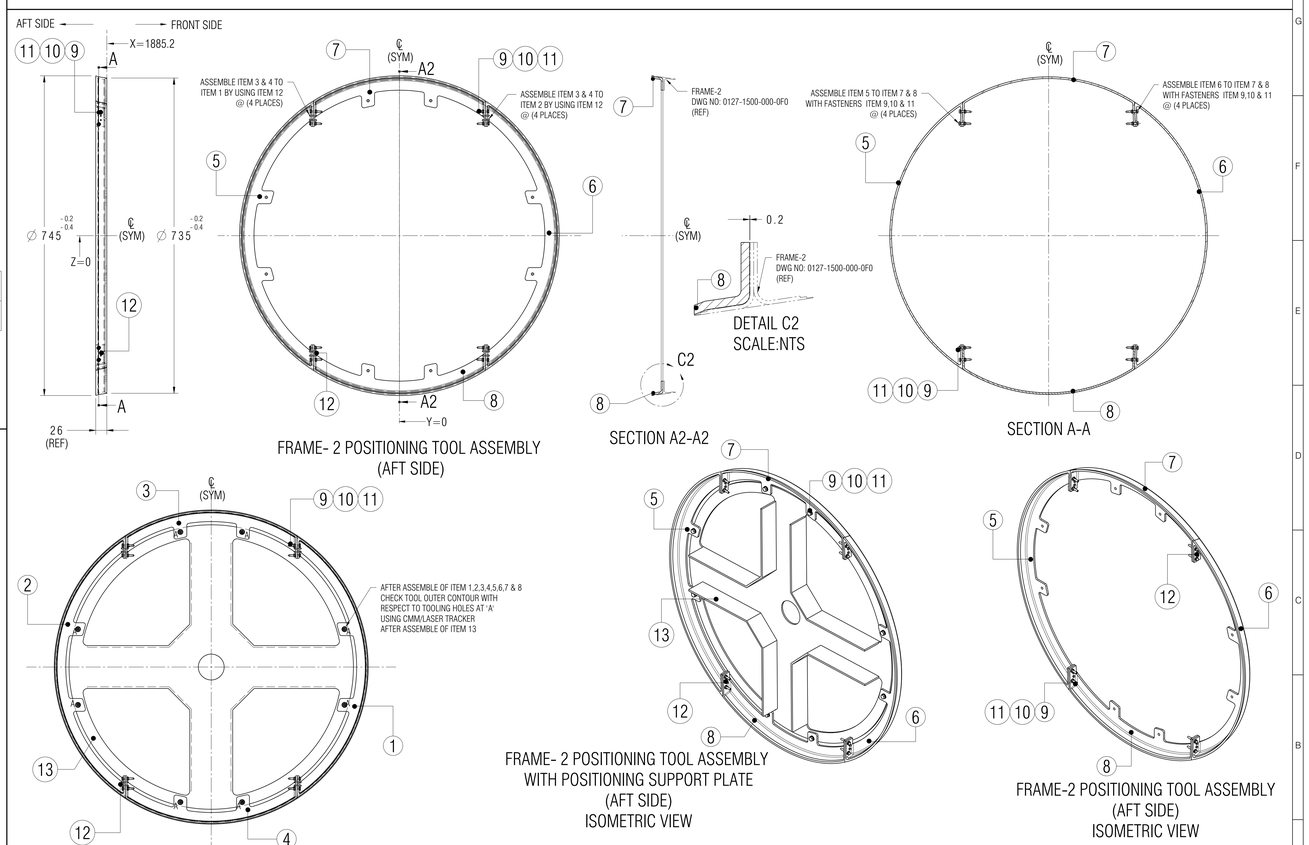

PROJECT - RVS-S3

TOOL NAME: POSITIONING TOOL FOR FRAME-2 ASSEMBLY (AFT SIDE)
TOOL NO: 0127-1600TP-000-000
PART NAME: FRAME-2
PART NO: 0127-1600-000-0F0
TOOL CLEARED FOR INSPECTED DATE STAMP
SL NO.

REF FOR QUOTATION PURPOSE ONLY

DIMENSIONS IN MM EXCEPT NOTED

TITLE RVS - S3

POSITIONING TOOL FOR
FRAME-2 ASSEMBLY

THIRD ANGLE PROJ.

SCALE 1:5 & NOTED

DWG. NO. 0127-1600TP-000-000

SHT 2 OF 2

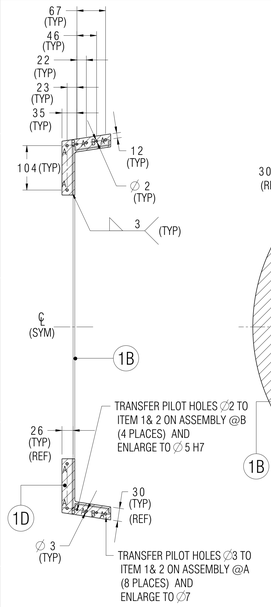

SECTION F-F

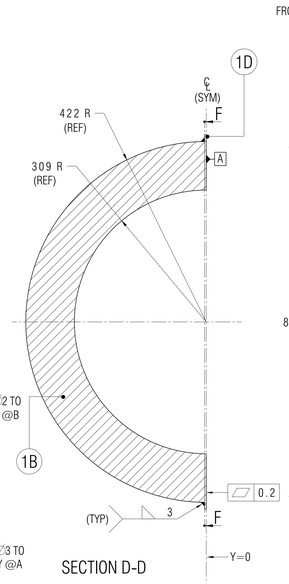

SECTION D-D

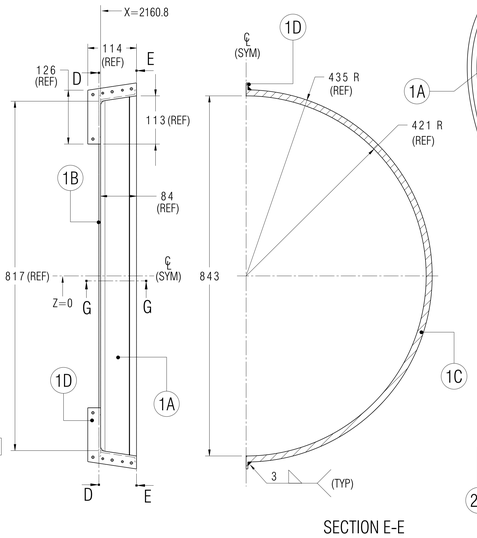

SECTION E-E

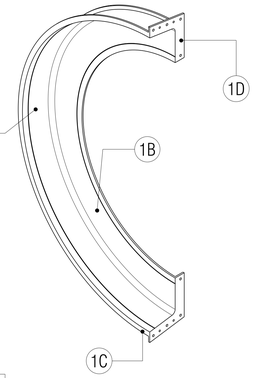

ITEM 1
ISOMETRIC VIEW

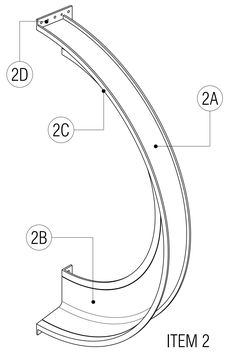

ITEM 2
ISOMETRIC VIEW

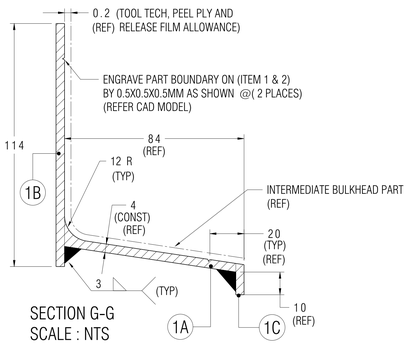

SECTION G-G
SCALE : NTS

DETAIL OF ITEM 1 & ITEM 2
B2 LAYUP TOOL-1 & 2
(AFT SIDE)

TABLE FOR ITEM 1 & ITEM 2

2D	2	1D	2	END FLANGE	SA 516 GRADE 70	REF. DETAIL DWG. TABLE	
2C	1	1C	1	SIDE FLANGE-2	SA 516 GRADE 70	REF. DETAIL DWG. TABLE	
2B	1	1B	1	SIDE FLANGE-1	SA 516 GRADE 70	REF. DETAIL DWG. TABLE	
2A	1	1A	1	CENTRE MOULD	SA 516 GRADE 70	REF. DETAIL DWG. TABLE	
ITEM NO 2	QTY	ITEM NO 1	QTY	DESCRIPTION	MATERIAL	SPECIFICATIONS	REMARKS

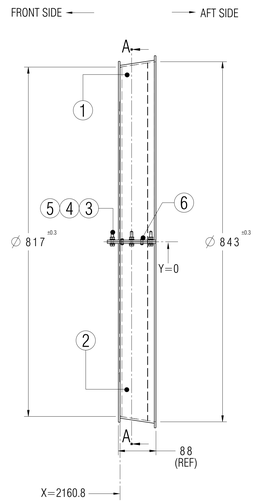

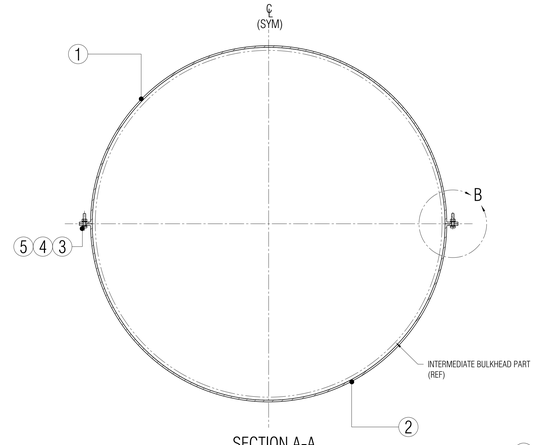

SECTION A-A

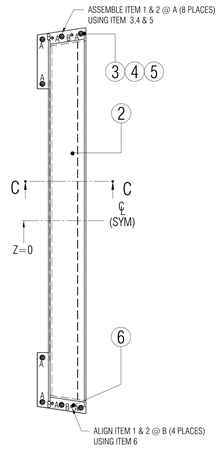

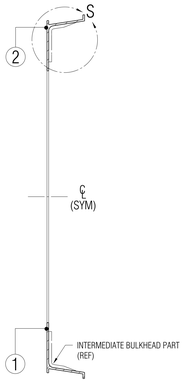

SECTION C-C

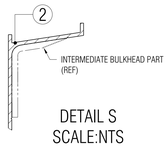

DETAIL S
SCALE:NTS

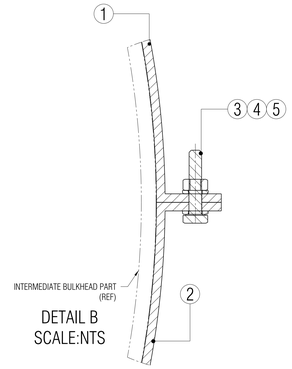

DETAIL B
SCALE:NTS

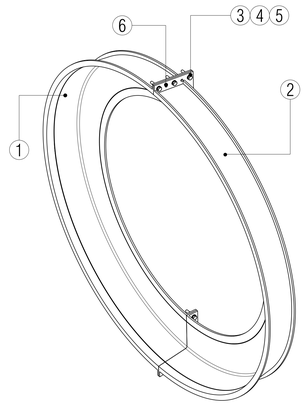

B2 LAYUP TOOL ASSEMBLY
(AFT SIDE)

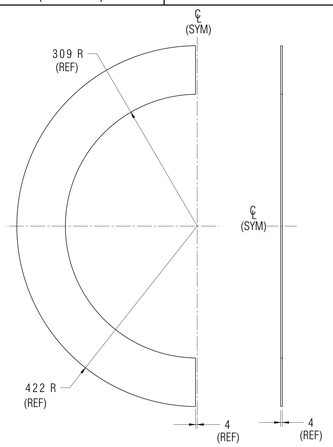

DETAIL OF ITEM 1B

1B	1	SIDE FLANGE-1	SA 516 GRADE 70	950X530X6	
ITEM NO	QTY	DESCRIPTION	MATERIAL	STOCK SIZE(mm)	REMARKS

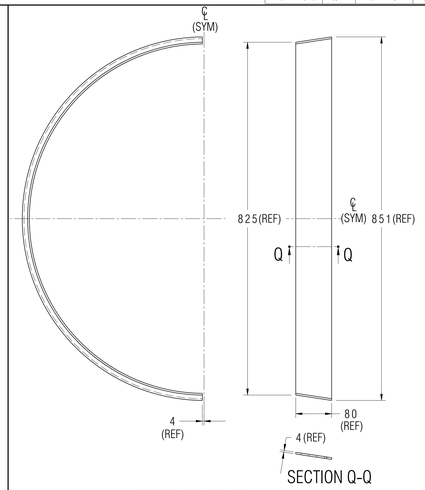

SECTION Q-Q

DETAIL OF ITEM 1A

1A	1	CENTRE MOULD	SA 516 GRADE 70	1390X490X6	
ITEM NO	QTY	DESCRIPTION	MATERIAL	STOCK SIZE(mm)	REMARKS

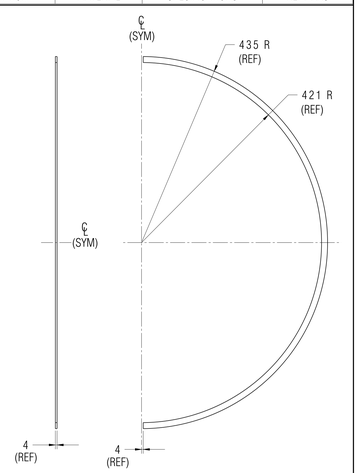

DETAIL OF ITEM 1C

1C	1	SIDE FLANGE-2	SA 516 GRADE 70	950X530X6	
ITEM NO	QTY	DESCRIPTION	MATERIAL	STOCK SIZE(mm)	REMARKS

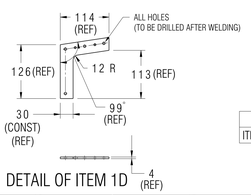

DETAIL OF ITEM 1D

1D	2	END FLANGE	SA 516 GRADE 70	240X215X6	
ITEM NO	QTY	DESCRIPTION	MATERIAL	STOCK SIZE(mm)	REMARKS

NOTE:
1. FOR THEORETICAL CONTOUR NMG REFER CATIA MODEL NMG-RVS-S3- 0127 AND FOR STATION DIAGRAM REFER DWG NO. 0127-000S-000-000
2. TOOL CONTOUR OFFSET BY 0.2MM OUTSIDE FROM THE PART OUTER SURFACE FOR TOOL TECH AND PEEL PLY ALLOWANCES.
3. TOLERANCE ON ITEM 1 & 2 THE CONTOUR SURFACE IS ±0.15MM INDIVIDUALLY AND AFTER ASSEMBLY OF ITEM 1 & 2 THE TOLERANCE ON CONTOUR SURFACE IS ±0.3MM AND INSPECT USING CMM/ LASER TRACKER.
4. IN ITEM 1 & ITEM 2 WELDING SHOULD BE LEAK PROOF WELDING, AND TO BE QUALIFIED BY RADIOGRAPHY/NDT.
5. ROUND OF ALL SHARP CORNERS AND EDGES BY 0.5R
6. STRESS RELIEVE THE TOOL AFTER FORMING, WELDING AND BEFORE FINAL MACHINING.
7. ALL MACHINED SURFACES/PLANES SHOULD BE HARD CHROME FINISH. (OTHER AREA TO BE PAINTED WITH HIGH TEMPERATURE SILVER PAINT TO WITHSTAND OPERATING TEMPERATURE OF 250°C).
8. ALL FASTENER BOLTS,NUTS AND WASHERS SHOULD BE HT 10.9 CLASS.
9. ACCEPTANCE OF VARIATION IN TOOL THICKNESS WITHIN ±1MM.
10. UNTOLERANCED DIMENSION CONFIRM TO IS 2102(PART-1)-COARSE.
11. MARK/TAG ON TOOL INDIVIDUALLY THUS

PROJECT - RVS - S3
TOOL NAME: LAYUP TOOL FOR BULK HEAD ASSEMBLY B2 (INT) (AFT SIDE)
TOOL NO: 0127-1300TL-000-000
PART NAME: BULK HEAD ASSEMBLY B2 (INT)
PART NO: 0127-1300-000-0F0
TOOL CLEARED FOR INSPECTED DATE STAMP
SL NO.

6	4	DOWEL PIN	CMS	∅5X20	STD
5	16	WASHER	STEEL	ID6X0D12	HT 10.9 CLASS
4	8	M6 HEX NUT	STEEL	M6	HT 10.9 CLASS
3	8	M6 HEX BOLT	STEEL	M6X20	HT 10.9 CLASS
2	1	B2 LAYUP TOOL-2 (AFT SIDE)	SA 516 GRADE 70	REF. DETAIL DWG. TABLE	SYMMETRY OF ITEM 1
1	1	B2 LAYUP TOOL-1 (AFT SIDE)	SA 516 GRADE 70	REF. DETAIL DWG. TABLE	
ITEM NO	QTY	DESCRIPTION	MATERIALS	STOCK SIZE	REMARKS

FOR QUOTATION PURPOSE ONLY

TITLE RVS - S3
DIMENSIONS IN MM EXCEPT NOTED

LAYUP TOOL FOR
BULKHEAD ASSEMBLY B2 (INT)
(AFT SIDE)

THIRD ANGLE PROJ
SCALE 1:5 & NOTED
DWG. NO. 0127-1300TL-000-000
SHT 1 OF 2

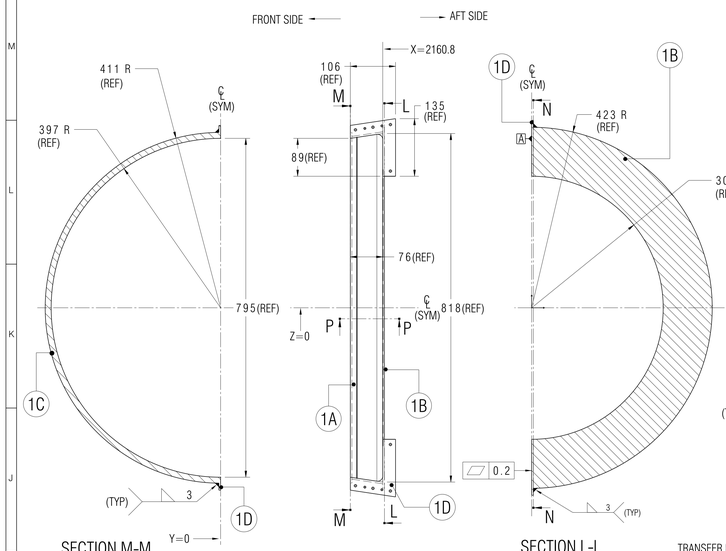

SECTION M-M

SECTION L-L

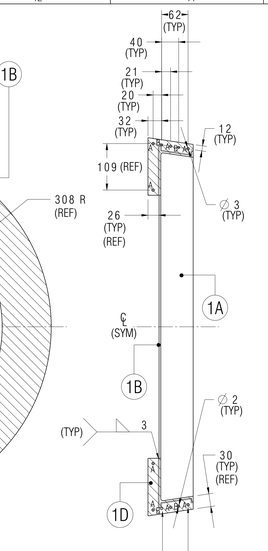

SECTION N-N

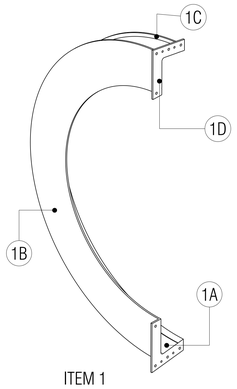

ITEM 1
ISOMETRIC VIEW

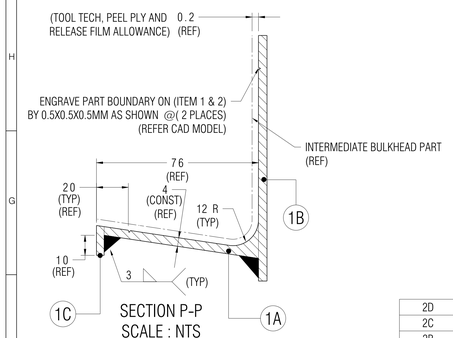

SECTION P-P
SCALE : NTS

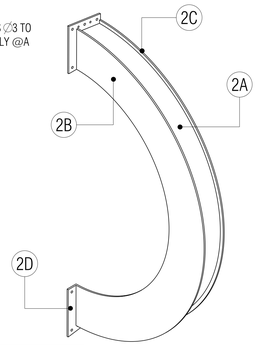

ITEM 2
ISOMETRIC VIEW

DETAIL OF ITEM 1 & ITEM 2
B2 LAYUP TOOL-1 & 2
(FRONT SIDE)

TABLE FOR ITEM 1 & ITEM 2

2D	2	1D	2	END FLANGE	SA 516 GRADE 70	REF. DETAIL DWG. TABLE	
2C	1	1C	1	SIDE FLANGE-2	SA 516 GRADE 70	REF. DETAIL DWG. TABLE	
2B	1	1B	1	SIDE FLANGE-1	SA 516 GRADE 70	REF. DETAIL DWG. TABLE	
2A	1	1A	1	CENTRE MOULD	SA 516 GRADE 70	REF. DETAIL DWG. TABLE	
ITEM NO 2	QTY	ITEM NO 1	QTY	DESCRIPTION	MATERIAL	SPECIFICATIONS	REMARKS

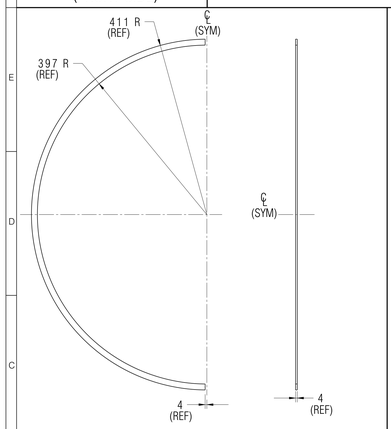

DETAIL OF ITEM 1B

1C	1	SIDE FLANGE-1	SA 516 GRADE 70	950X530X6	
ITEM NO	QTY	DESCRIPTION	MATERIAL	STOCK SIZE(mm)	REMARKS

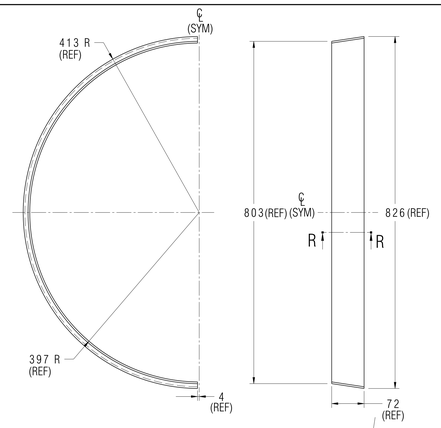

DETAIL OF ITEM 1A

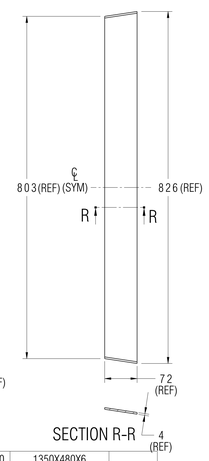

SECTION R-R

1A	1	CENTRE MOULD	SA 516 GRADE 70	1350X480X6	
ITEM NO	QTY	DESCRIPTION	MATERIAL	STOCK SIZE(mm)	REMARKS

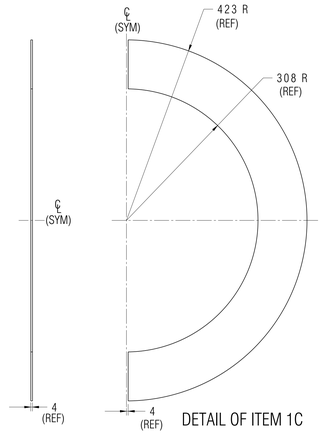

DETAIL OF ITEM 1C

1B	1	SIDE FLANGE-2	SA 516 GRADE 70	950X530X6	
ITEM NO	QTY	DESCRIPTION	MATERIAL	STOCK SIZE(mm)	REMARKS

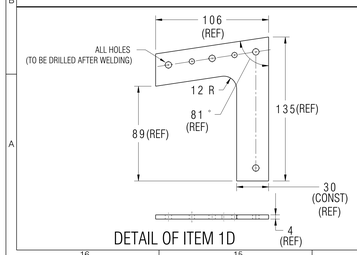

DETAIL OF ITEM 1D

1D	2	END FLANGE	SA 516 GRADE 70	220X210X6	
ITEM NO	QTY	DESCRIPTION	MATERIAL	STOCK SIZE(mm)	REMARKS

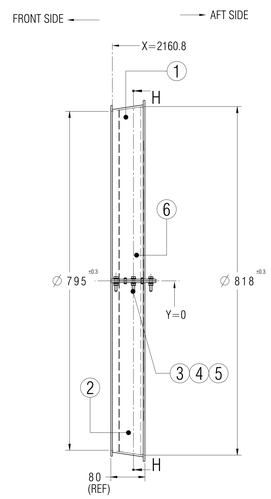

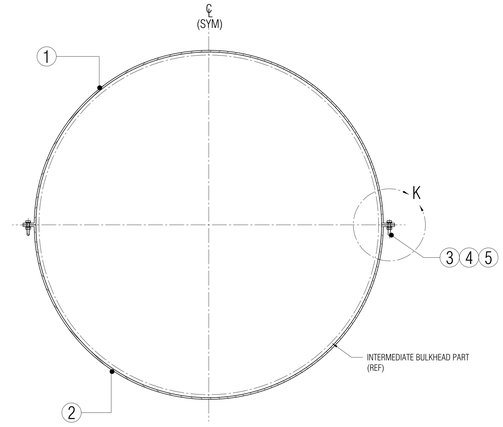

SECTION H-H

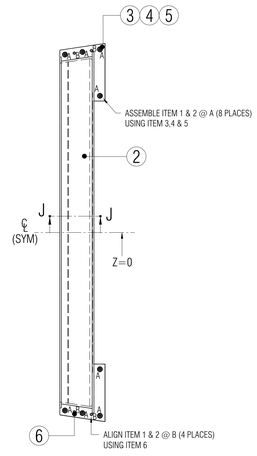

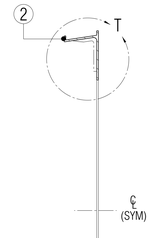

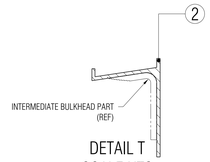

DETAIL T
SCALE:NTS

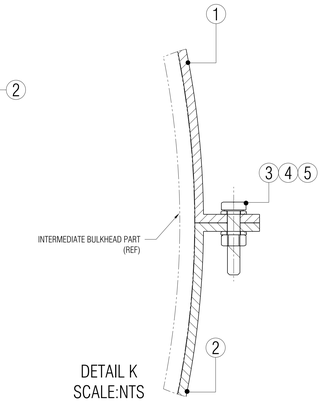

DETAIL K
SCALE:NTS

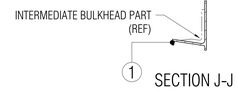

SECTION J-J

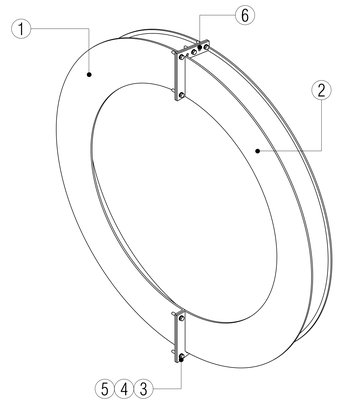

B2 LAYUP TOOL ASSEMBLY
(FRONT SIDE)

NOTE:
1. FOR THEORETICAL CONTOUR NMG REFER CATIA MODEL NMG-RVS-S3- 0127
   AND FOR STATION DIAGRAM REFER DWG NO. 0127-000S-000-000
2. TOOL CONTOUR OFFSET BY 0.2MM OUTSIDE FROM THE PART OUTER SURFACE FOR TOOL TECH AND PEEL PLY ALLOWANCES.
3. TOLERANCE ON ITEM 1 & 2 THE CONTOUR SURFACE IS ±0.15MM INDIVIDUALLY AND AFTER ASSEMBLY OF ITEM 1 & 2
   THE TOLERANCE ON CONTOUR SURFACE IS ±0.3MM AND INSPECT USING CMM/ LASER TRACKER.
4. IN ITEM 1 & ITEM 2 WELDING SHOULD BE LEAK PROOF WELDING, AND TO BE QUALIFIED BY RADIOGRAPHY/NDT.
5. ROUND OF ALL SHARP CORNERS AND EDGES BY 0.5R
6. STRESS RELIEVE THE TOOL AFTER FORMING, WELDING AND BEFORE FINAL MACHINING.
7. ALL MACHINED SURFACES/PLANES SHOULD BE HARD CHROME FINISH. (OTHER AREA TO BE PAINTED
   WITH HIGH TEMPERATURE SILVER PAINT TO WITHSTAND OPERATING TEMPERATURE OF 250°C).
8. ALL FASTENER BOLTS,NUTS AND WASHERS SHOULD BE HT 10.9 CLASS.
9. ACCEPTANCE OF VARIATION IN TOOL THICKNESS WITHIN ±1MM.
10. UNTOLERANCED DIMENSION CONFIRM TO IS 2102(PART-1)-COARSE.
11. MARK/TAG ON TOOL INDIVIDUALLY THUS

PROJECT - RVS - S3
TOOL NAME: LAYUP TOOL FOR BULK HEAD ASSEMBLY B2 (INT) (FRONT SIDE)
TOOL NO: 0127-1300TL-000-000
PART NAME: BULK HEAD ASSEMBLY B2 (INT)
PART NO: 0127-1300-000-0F0
TOOL CLEARED FOR INSPECTED DATE STAMP
SL NO.

6	4	DOWEL PIN	CMS	∅5X20	STD
5	16	WASHER	STEEL	ID6XOD12	HT 10.9 CLASS
4	8	M6 HEX NUT	STEEL	M6	HT 10.9 CLASS
3	8	M6 HEX BOLT	STEEL	M6X20	HT 10.9 CLASS
2	1	B2 LAYUP TOOL-2 (FRONT SIDE)	SA 516 GRADE 70	REF. DETAIL DWG. TABLE	SYMMETRY OF ITEM 1
1	1	B2 LAYUP TOOL-1 (FRONT SIDE)	SA 516 GRADE 70	REF. DETAIL DWG. TABLE	
ITEM NO	QTY	DESCRIPTION	MATERIALS	SPECIFICATIONS	REMARKS

FOR QUOTATION PURPOSE ONLY

TITLE RVS - S3
DIMENSIONS IN MM EXCEPT NOTED

LAYUP TOOL FOR
BULKHEAD ASSEMBLY B2 (INT)
(FRONT SIDE)

THIRD ANGLE PROJ.
SCALE 1:5 & NOTED
DWG. NO. 0127-1300TL-000-000
SHT 2 OF 2

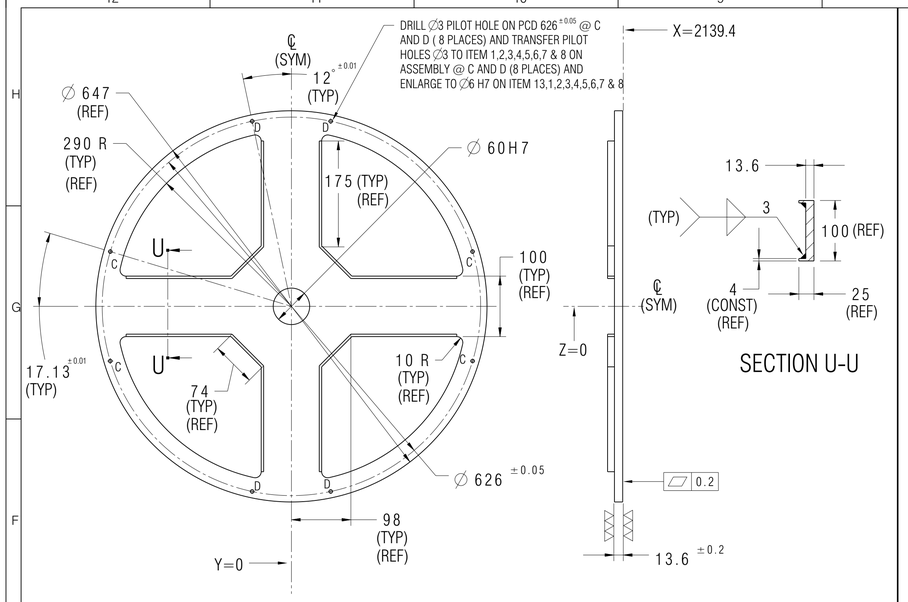

DETAIL OF ITEM 13

13	1	B3 POSITIONING SUPPORT PLATE	SA 516 GRADE 70	∅700X∅700X18	
ITEM NO	QTY	DESCRIPTION	MATERIAL	STOCK SIZE(mm)	REMARKS

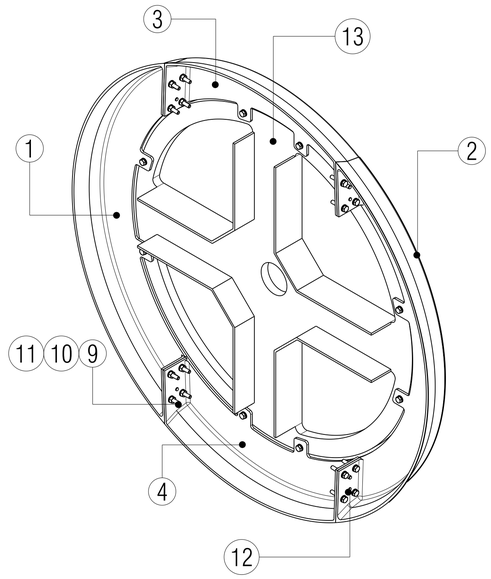

B2 BULKHEAD
POSITIONING TOOL ASSEMBLY
(AFT SIDE)
ISOMETRIC VIEW

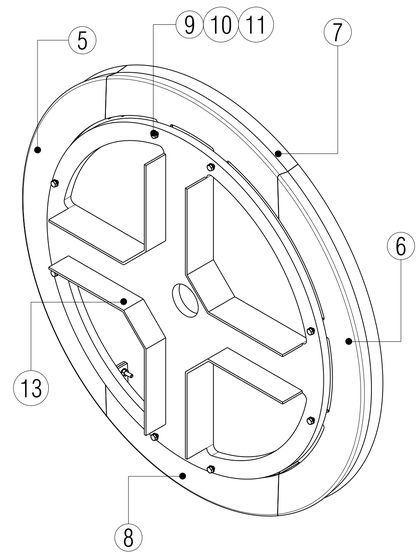

B2 BULKHEAD
POSITIONING TOOL ASSEMBLY
(FRONT SIDE)
ISOMETRIC VIEW

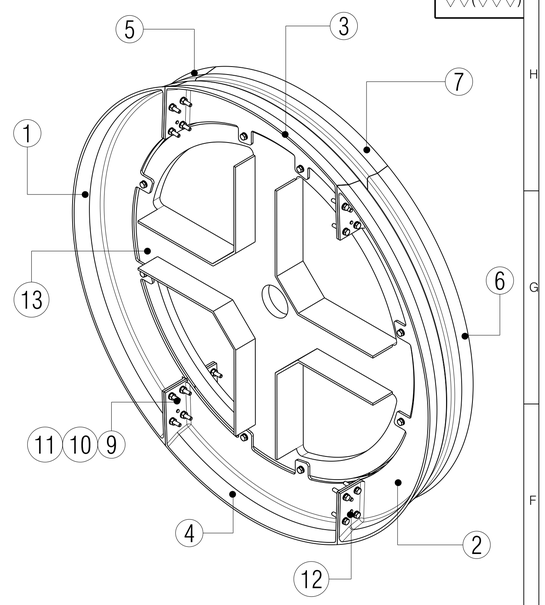

B2 BULKHEAD
POSITIONING TOOL ASSEMBLY
(AFT SIDE AND FRONT SIDE)
WITH POSITIONING SUPPORT PLATE
ISOMETRIC VIEW

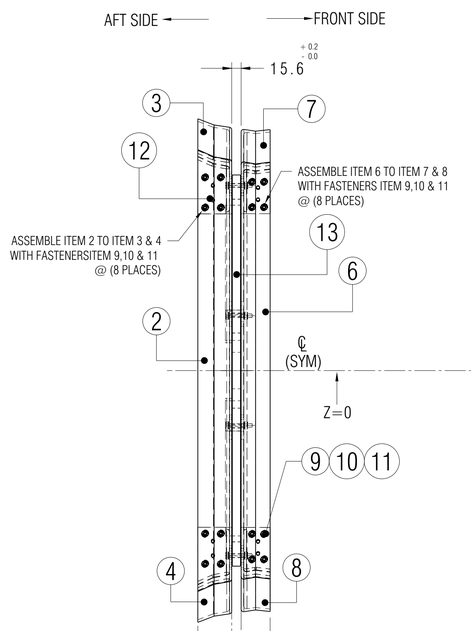

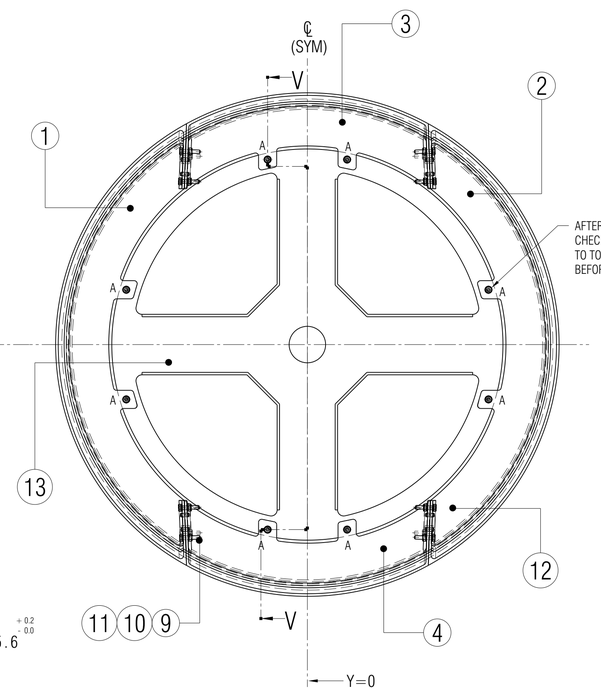

B2 BULKHEAD POSITIONING TOOL ASSEMBLY
(AFT SIDE AND FRONT SIDE)

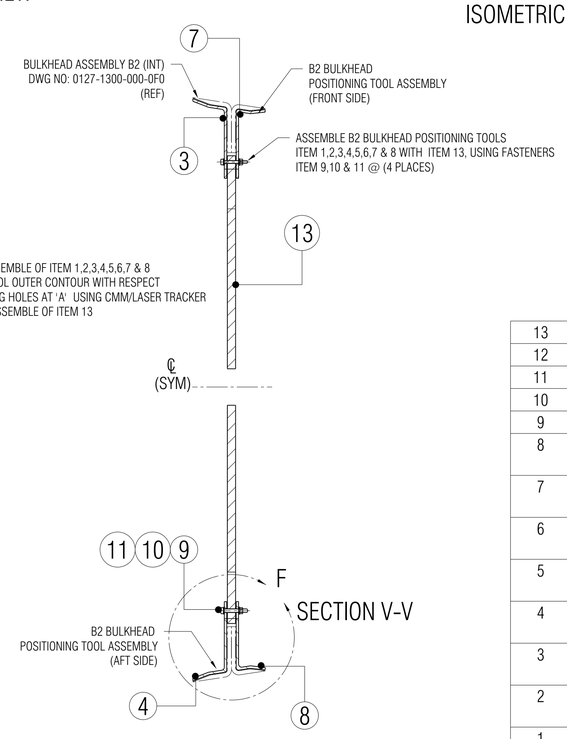

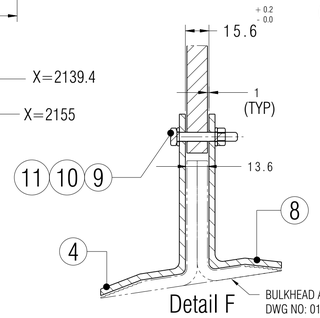

Detail F
Scale:NTS

NOTE:
1. FOR THEORETICAL CONTOUR NMG REFER CATIA MODEL NMG-RVS-S3- 0127 AND FOR STATION DIAGRAM REFER DWG NO. 0127-000S-000-000.
2. TOOL CONTOUR OFFSET BY 1MM INSIDE FROM THE PART INNER SURFACE FOR TOOL TECH, PEEL PLY AND GREEN STAGE PART THICKNESS ALLOWANCES.
3. TOLERANCE ON ITEM 1, 2, 3 & 4 THE CONTOUR SURFACE IS ±0.15MM INDIVIDUALLY AND AFTER ASSEMBLY OF ITEM 1,2,3 & 4 THE TOLERANCE ON CONTOUR SURFACE IS ±0.3MM AND INSPECT USING CMM/ LASER TRACKER.
4. IN ITEM 1,2,3 & 4 WELDING SHOULD BE LEAK PROOF WELDING, AND TO BE QUALIFIED BY RADIOGRAPHY/ NDT.
5. ROUND OF ALL SHARP CORNERS AND EDGES BY 0.5R
6.STRESS RELIEVE THE TOOL AFTER FORMING, WELDING AND BEFORE FINAL MACHINING.
7. ALL MACHINED SURFACES/PLANES SHOULD BE HARD CHROME FINISH. (OTHER AREA TO BE PAINTED WITH HIGH TEMPERATURE SILVER PAINT TO WITHSTAND OPERATING TEMPERATURE OF 250°C).
8. ALL FASTENER BOLTS,NUTS AND WASHERS SHOULD BE HT 10.9 CLASS.
9. ACCEPTANCE OF VARIATION IN TOOL THICKNESS WITHIN ±1MM.
10. UNTOLERANCED DIMENSION CONFIRM TO IS 2102(PART-1)-COARSE.
11. MARK/TAG ON TOOL INDIVIDUALLY THUS

13	1	B2 POSITIONING SUPPORT PLATE	SA 516 GRADE 70	REF. DETAIL DWG. TABLE	
12	16	DOWEL PIN	CMS	∅5X20	STD
11	40	M6 HEX NUT	STEEL	M6	HT 10.9 CLASS
10	80	WASHER	STEEL	ID6XOD12	HT 10.9 CLASS
9	40	M6 HEX BOLT	STEEL	M6X20	HT 10.9 CLASS
8	1	B2 BULKHEAD POSITIONING TOOL-8 (FRONT SIDE)	SA 516 GRADE 70	REF. DETAIL DWG. TABLE	SYMMETRY OF ITEM 7
7	1	B2 BULKHEAD POSITIONING TOOL-7 (FRONT SIDE)	SA 516 GRADE 70	REF. DETAIL DWG. TABLE	
6	1	B2 BULKHEAD POSITIONING TOOL-6 (FRONT SIDE)	SA 516 GRADE 70	REF. DETAIL DWG. TABLE	SYMMETRY OF ITEM 5
5	1	B2 BULKHEAD POSITIONING TOOL-5 (FRONT SIDE)	SA 516 GRADE 70	REF. DETAIL DWG. TABLE	
4	1	B2 BULKHEAD POSITIONING TOOL-4 (AFT SIDE)	SA 516 GRADE 70	REF. DETAIL DWG. TABLE	SYMMETRY OF ITEM 3
3	1	B2 BULKHEAD POSITIONING TOOL-3 (AFT SIDE)	SA 516 GRADE 70	REF. DETAIL DWG. TABLE	
2	1	B2 BULKHEAD POSITIONING TOOL-2 (AFT SIDE)	SA 516 GRADE 70	REF. DETAIL DWG. TABLE	SYMMETRY OF ITEM 1
1	1	B2 BULKHEAD POSITIONING TOOL-1 (AFT SIDE)	SA 516 GRADE 70	REF. DETAIL DWG. TABLE	
ITEM NO	QTY	DESCRIPTION	MATERIALS	SPECIFICATIONS	REMARKS

PROJECT - RVS - S3

TOOL NAME: POSITIONING TOOL FOR BULKHEAD ASSEMBLY B2 (INT)
TOOL NO: 0127-1300TP-000-000
PART NAME: BULKHEAD ASSEMBLY B2 (INT)
PART NO: 0127-1300-000-0F0
TOOL CLEARED FOR INSPECTED DATE STAMP
SL NO.

FOR QUOTATION PURPOSE ONLY

DIMENSIONS IN MM EXCEPT NOTED

TITLE RVS - S3

POSITIONING TOOL FOR
BULKHEAD ASSEMBLY B2 (INT)

THIRD ANGLE PROJ. | SCALE 1:5 & NOTED | DWG. NO. 0127-1300T-000-000 | SHT. 1 OF 3

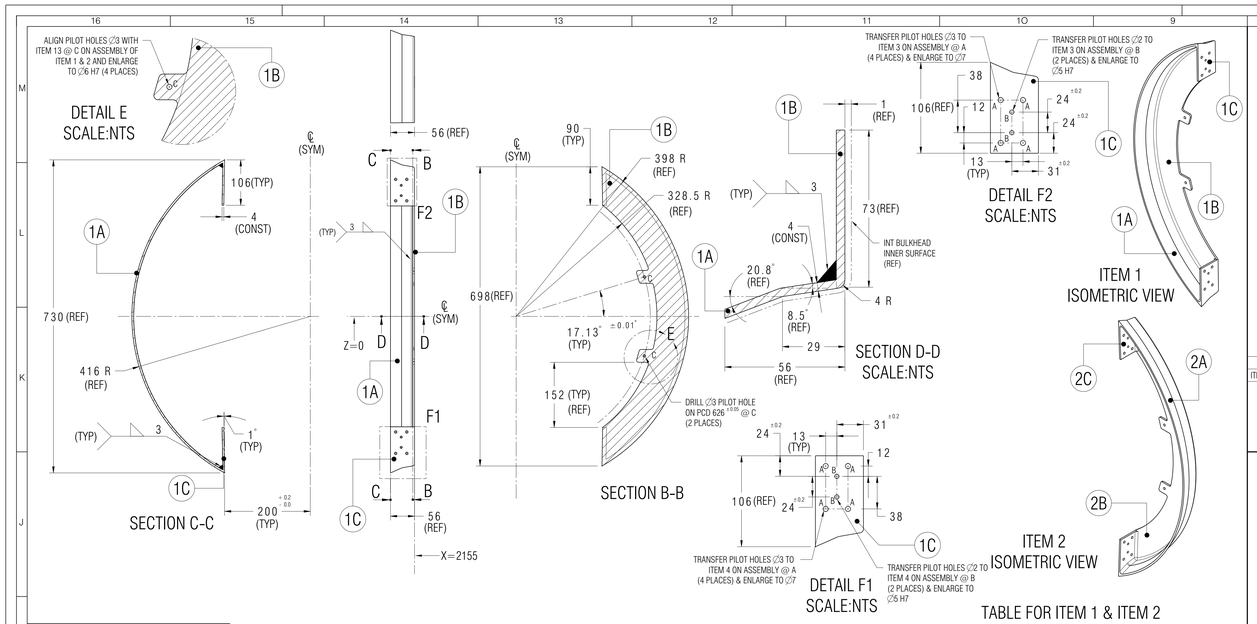

DETAIL OF ITEM 1 & ITEM 2
B2 POSITIONING TOOL-1 & 2
(AFT SIDE)

TABLE FOR ITEM 1 & ITEM 2

ITEM NO 2	QTY	ITEM NO 1	QTY	DESCRIPTION	MATERIAL	SPECIFICATION	REMARKS
2C	2	1C	2	END FLANGE	SA 516 GRADE 70	REF. DETAIL DWG. TABLE	
2B	1	1B	1	SIDE FLANGE	SA 516 GRADE 70	REF. DETAIL DWG. TABLE	
2A	1	1A	1	CENTRE MOULD	SA 516 GRADE 70	REF. DETAIL DWG. TABLE	

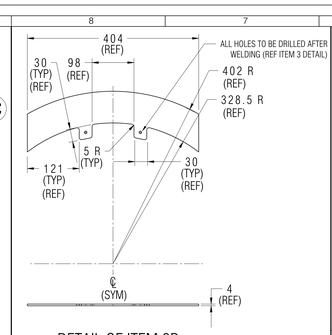

ITEM NO	QTY	DESCRIPTION	MATERIAL	STOCK SIZE(mm)	REMARKS
3B	1	SIDE FLANGE	SA 516 GRADE 70	850X300X6	

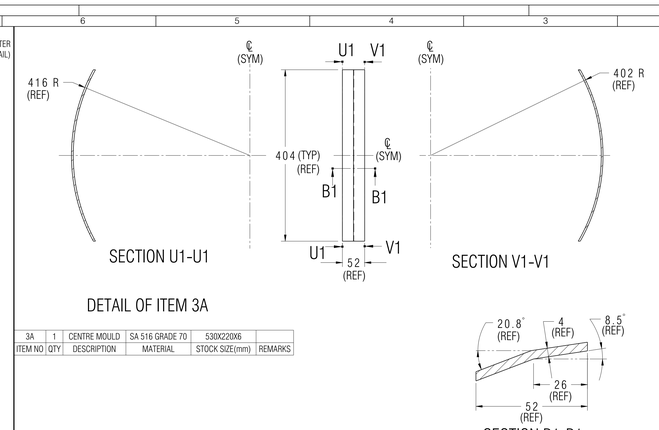

ITEM NO	QTY	DESCRIPTION	MATERIAL	STOCK SIZE(mm)	REMARKS
3A	1	CENTRE MOULD	SA 516 GRADE 70	530X220X6	

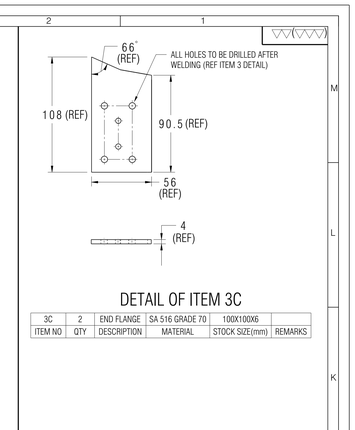

ITEM NO	QTY	DESCRIPTION	MATERIAL	STOCK SIZE(mm)	REMARKS
3C	2	END FLANGE	SA 516 GRADE 70	100X100X6	

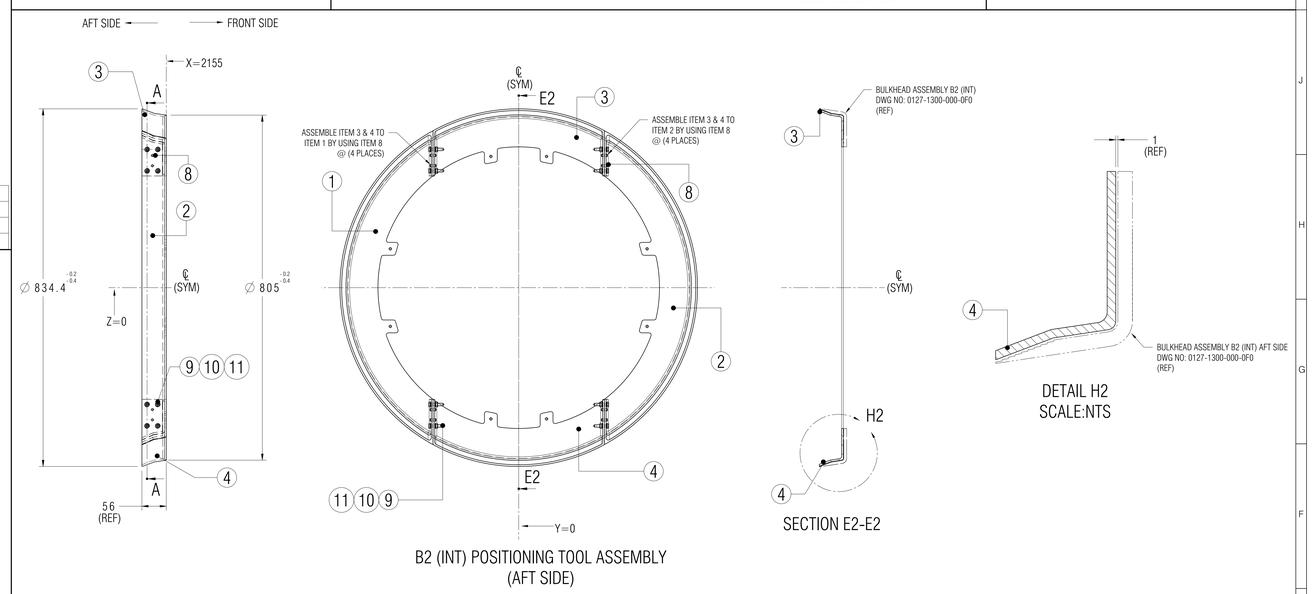

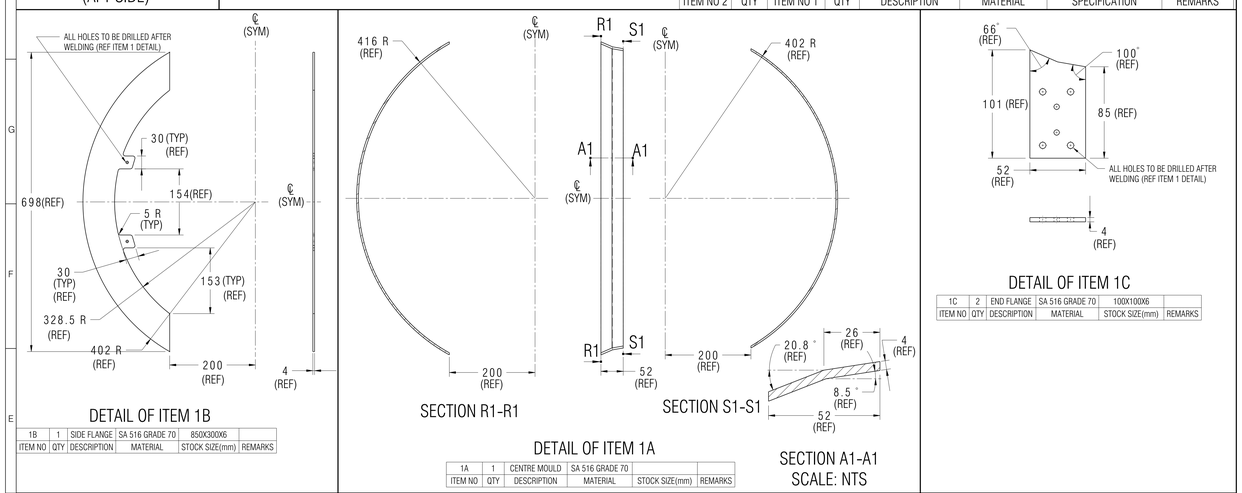

ITEM NO	QTY	DESCRIPTION	MATERIAL	STOCK SIZE(mm)	REMARKS
1B	1	SIDE FLANGE	SA 516 GRADE 70	850X300X6	

ITEM NO	QTY	DESCRIPTION	MATERIAL	STOCK SIZE(mm)	REMARKS
1A	1	CENTRE MOULD	SA 516 GRADE 70		

ITEM NO	QTY	DESCRIPTION	MATERIAL	STOCK SIZE(mm)	REMARKS
1C	2	END FLANGE	SA 516 GRADE 70	100X100X6	

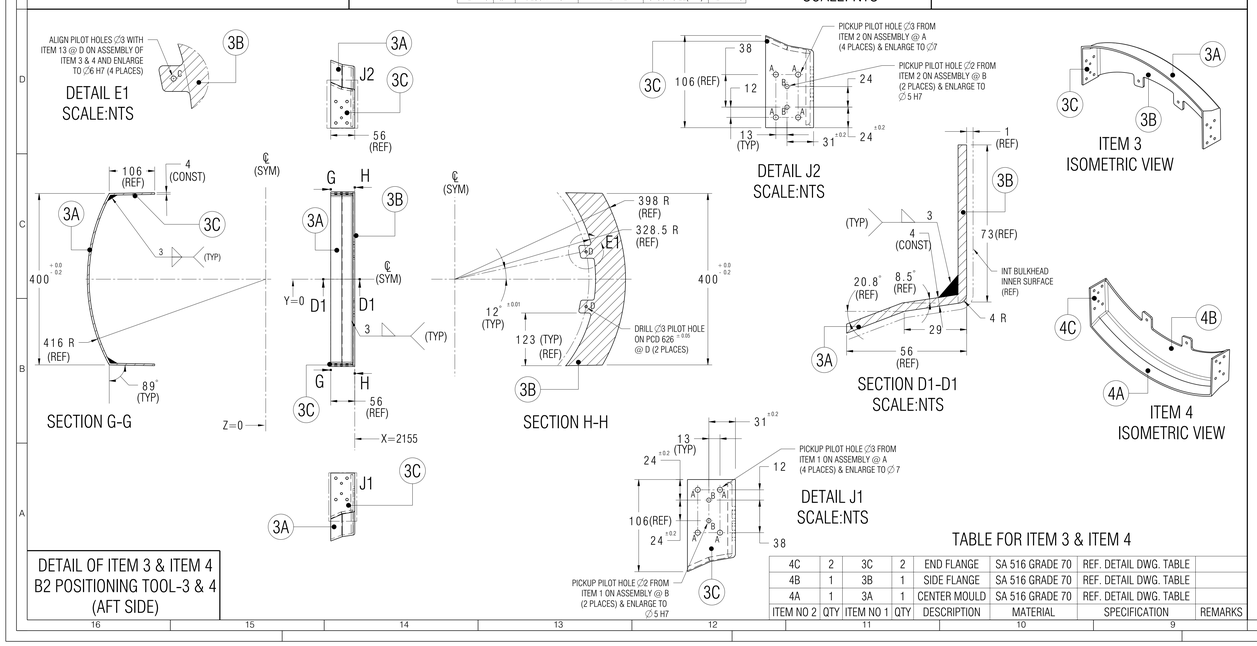

DETAIL OF ITEM 3 & ITEM 4
B2 POSITIONING TOOL-3 & 4
(AFT SIDE)

TABLE FOR ITEM 3 & ITEM 4

ITEM NO 2	QTY	ITEM NO 1	QTY	DESCRIPTION	MATERIAL	SPECIFICATION	REMARKS
4C	2	3C	2	END FLANGE	SA 516 GRADE 70	REF. DETAIL DWG. TABLE	
4B	1	3B	1	SIDE FLANGE	SA 516 GRADE 70	REF. DETAIL DWG. TABLE	
4A	1	3A	1	CENTER MOULD	SA 516 GRADE 70	REF. DETAIL DWG. TABLE	

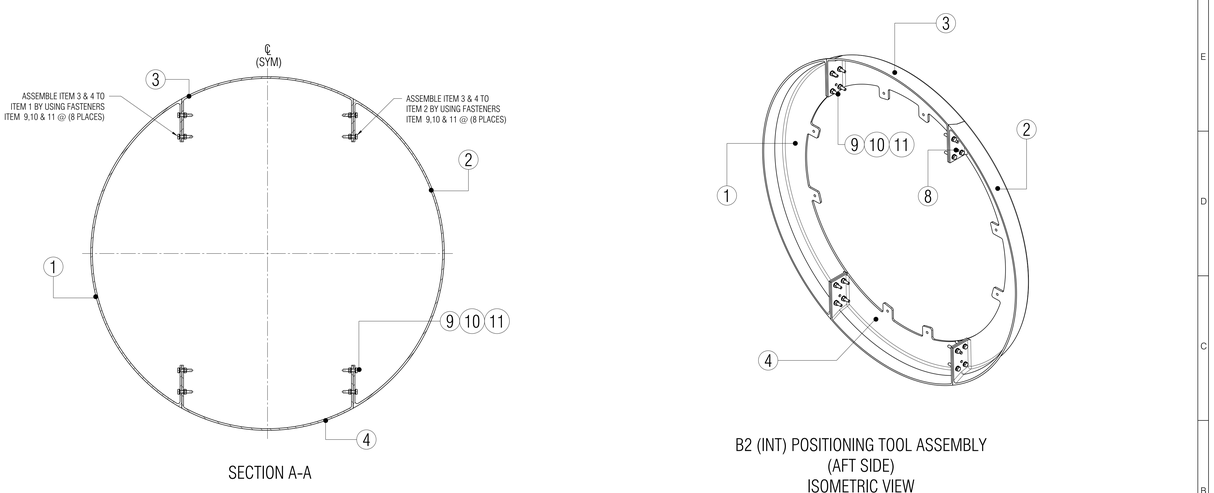

PROJECT - RVS - S3
TOOL NAME: POSITIONING TOOL FOR BULKHEAD ASSEMBLY B2 (INT) (AFT SIDE)
TOOL NO: 0127-1300TP-000-000
PART NAME: BULKHEAD ASSEMBLY INT
PART NO: 0127-1300-000-0F0
TOOL CLEARED FOR INSPECTED DATE STAMP
SL NO.

FOR QUOTATION PURPOSE ONLY

TITLE RVS - S3
DIMENSIONS IN MM EXCEPT NOTED

POSITIONING TOOL FOR
BULKHEAD ASSEMBLY B2 (INT)

THIRD ANGLE PROJ.
SCALE 1:5 & NOTED
DWG. NO. 0127-1300TP-000-000
SHT 2 OF 3

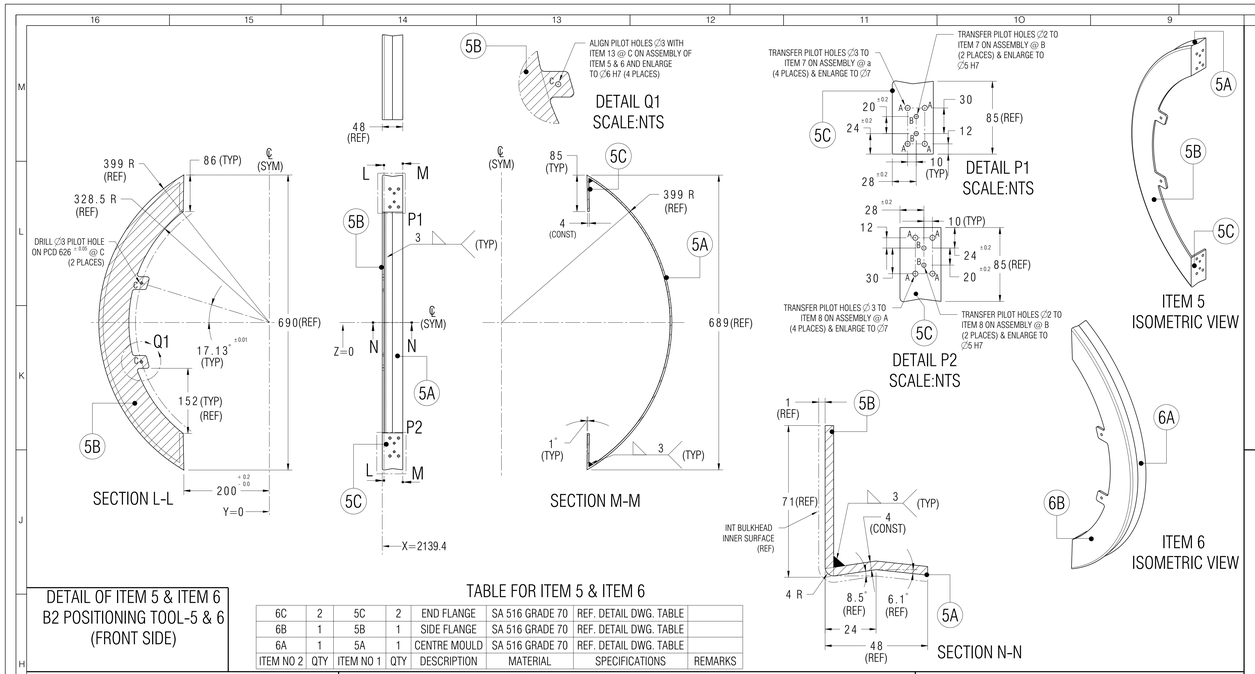

DETAIL OF ITEM 5 & ITEM 6
B2 POSITIONING TOOL-5 & 6
(FRONT SIDE)

TABLE FOR ITEM 5 & ITEM 6

ITEM NO 2	QTY	ITEM NO 1	QTY	DESCRIPTION	MATERIAL	SPECIFICATIONS	REMARKS
6C	2	5C	2	END FLANGE	SA 516 GRADE 70	REF. DETAIL DWG. TABLE	
6B	1	5B	1	SIDE FLANGE	SA 516 GRADE 70	REF. DETAIL DWG. TABLE	
6A	1	5A	1	CENTRE MOULD	SA 516 GRADE 70	REF. DETAIL DWG. TABLE	

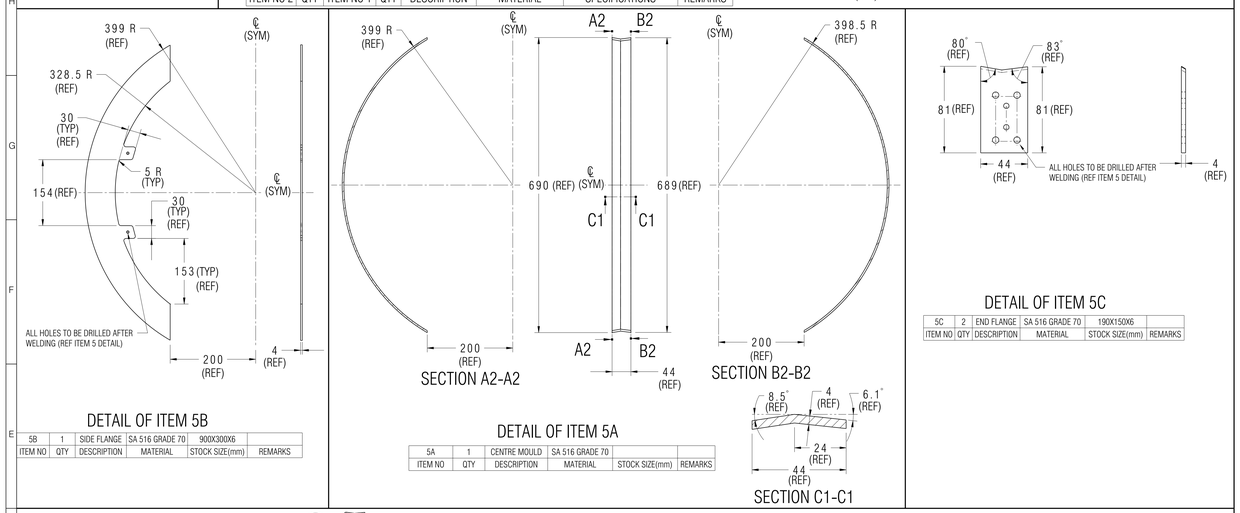

ITEM NO	QTY	DESCRIPTION	MATERIAL	STOCK SIZE(mm)	REMARKS
5B	1	SIDE FLANGE	SA 516 GRADE 70	900X300X6	

ITEM NO	QTY	DESCRIPTION	MATERIAL	STOCK SIZE(mm)	REMARKS
5A	1	CENTRE MOULD	SA 516 GRADE 70		

ITEM NO	QTY	DESCRIPTION	MATERIAL	STOCK SIZE(mm)	REMARKS
5C	2	END FLANGE	SA 516 GRADE 70	190X150X6	

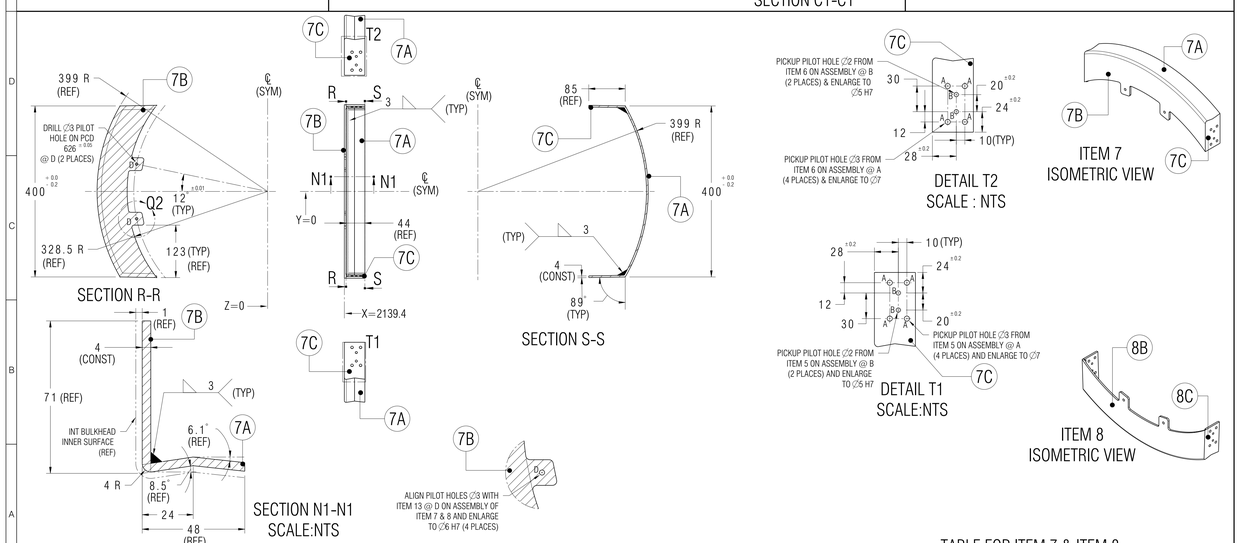

DETAIL OF ITEM 7 & ITEM 8
B1 POSITIONING TOOL-7 & 8
(FRONT SIDE)

TABLE FOR ITEM 7 & ITEM 8

ITEM NO 2	QTY	ITEM NO 1	QTY	DESCRIPTION	MATERIAL	SPECIFICATION	REMARKS
8C	2	7C	2	END FLANGE	SA 516 GRADE 70	REF. DETAIL DWG. TABLE	
8B	1	7B	1	SIDE FLANGE	SA 516 GRADE 70	REF. DETAIL DWG. TABLE	
8A	1	7A	1	CENTER MOULD	SA 516 GRADE 70	REF. DETAIL DWG. TABLE	

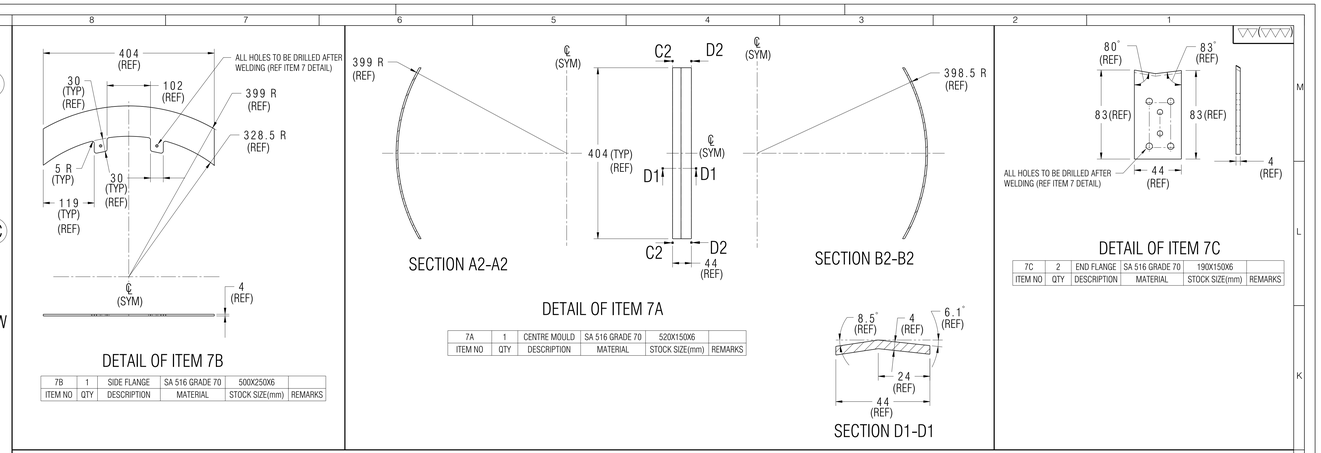

ITEM NO	QTY	DESCRIPTION	MATERIAL	STOCK SIZE(mm)	REMARKS
7B	1	SIDE FLANGE	SA 516 GRADE 70	500X250X6	

ITEM NO	QTY	DESCRIPTION	MATERIAL	STOCK SIZE(mm)	REMARKS
7A	1	CENTRE MOULD	SA 516 GRADE 70	520X150X6	

ITEM NO	QTY	DESCRIPTION	MATERIAL	STOCK SIZE(mm)	REMARKS
7C	2	END FLANGE	SA 516 GRADE 70	190X150X6	

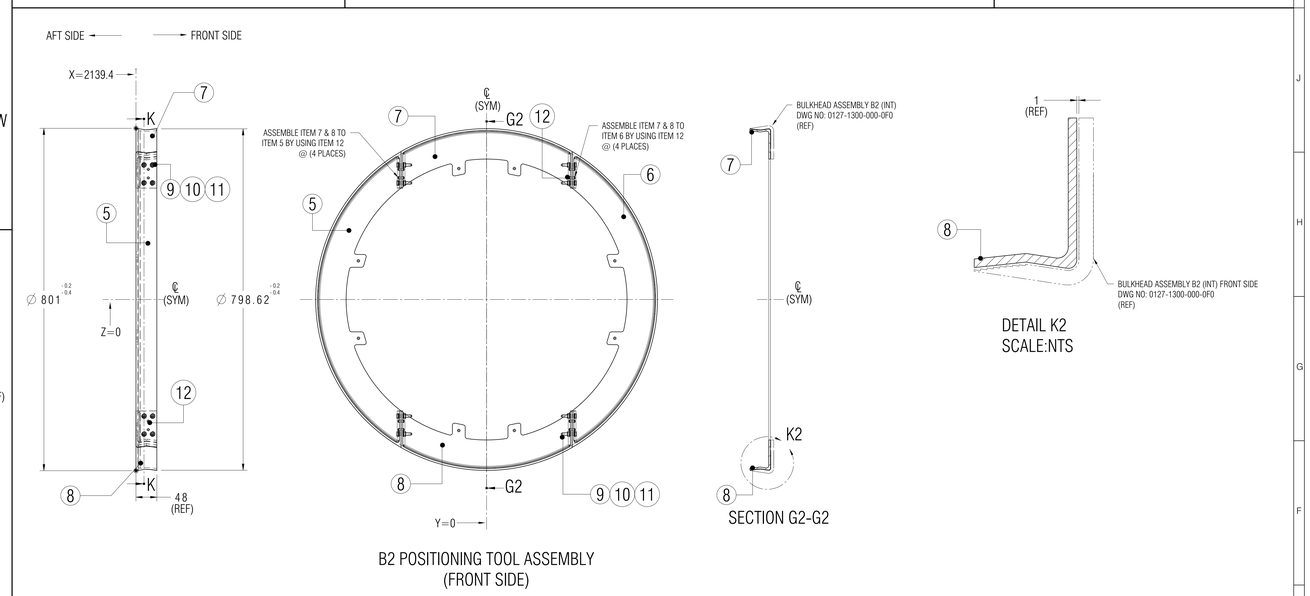

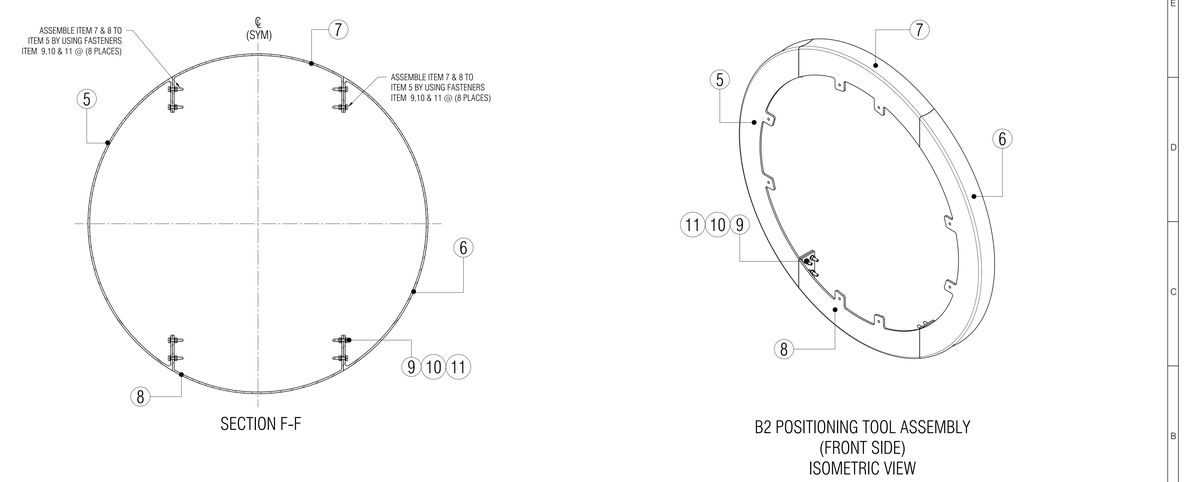

PROJECT - RVS - S3

TOOL NAME: POSITIONING TOOL FOR BULKHEAD ASSEMBLY B2 (INT)
(FRONT SIDE)
TOOL NO: 0127-1300TP-000-000
PART NAME: BULKHEAD ASSEMBLY B2 (INT)
PART NO: 0127-1300-000-0F0
TOOL CLEARED FOR INSPECTED DATE STAMP
SL NO.

FOR QUOTATION PURPOSE ONLY

TITLE RVS - S3

DIMENSIONS IN MM EXCEPT NOTED

POSITIONING TOOL FOR
BULKHEAD ASSEMBLY B2 (INT)

THIRD ANGLE PROJ.

SCALE 1:5 & NOTED

DWG. NO. 0127-1300TP-000-000

SHT 3 OF 3

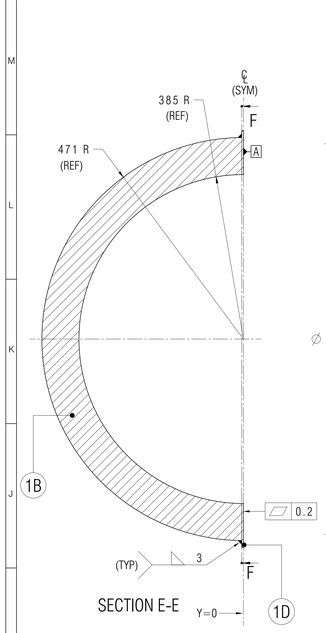

SECTION E-E

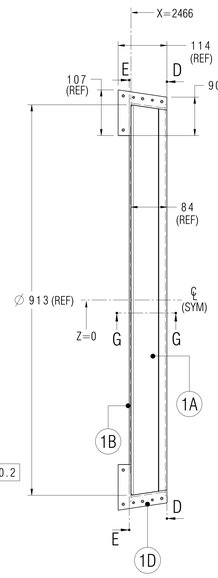

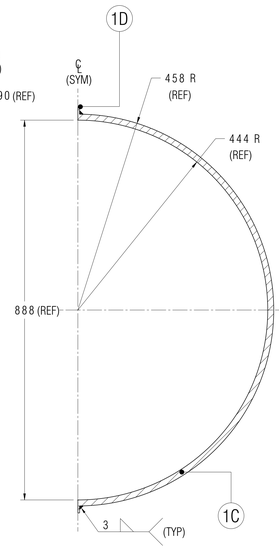

SECTION D-D

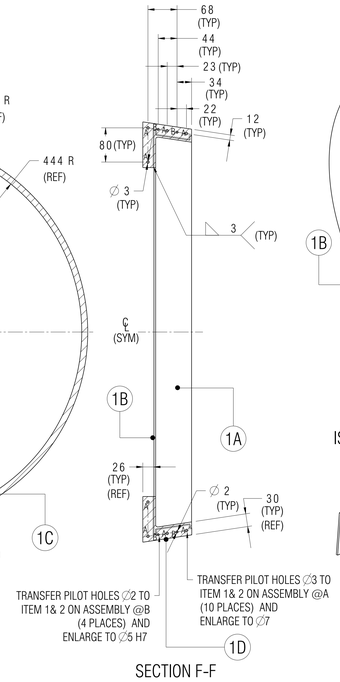

SECTION F-F

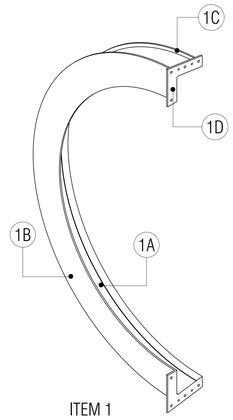

ITEM 1
ISOMETRIC VIEW

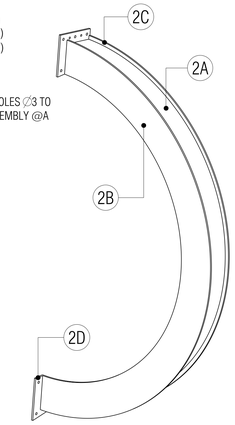

ITEM 2
ISOMETRIC VIEW

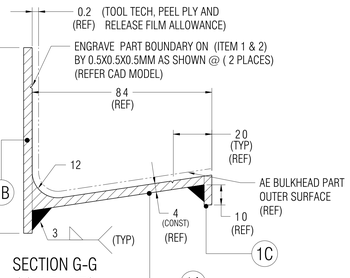

SECTION G-G
SCALE : NTS

DETAIL OF ITEM 1 & ITEM 2
B3 LAYUP TOOL-1 & 2

TABLE FOR ITEM 1 & ITEM 2

2D	2	1D	2	END FLANGE	SA 516 GRADE 70	REF. DETAIL DWG. TABLE	
2C	1	1C	1	SIDE FLANGE-2	SA 516 GRADE 70	REF. DETAIL DWG. TABLE	
2B	1	1B	1	SIDE FLANGE-1	SA 516 GRADE 70	REF. DETAIL DWG. TABLE	
2A	1	1A	1	CENTRE MOULD	SA 516 GRADE 70	REF. DETAIL DWG. TABLE	
ITEM NO 2	QTY	ITEM NO 1	QTY	DESCRIPTION	MATERIAL	SPECIFICATIONS	REMARKS

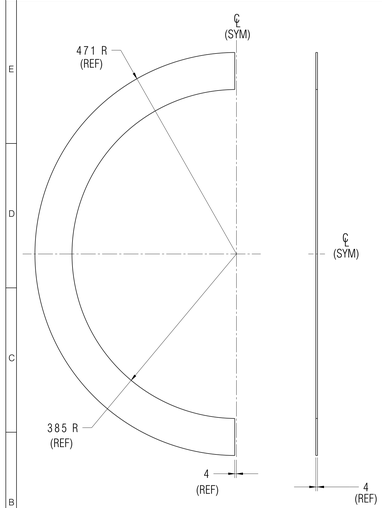

DETAIL OF ITEM 1B

1B	1	SIDE FLANGE-1	SA 516 GRADE 70	1000X500X6	
ITEM NO 1	QTY	DESCRIPTION	MATERIAL	STOCK SIZE(mm)	REMARKS

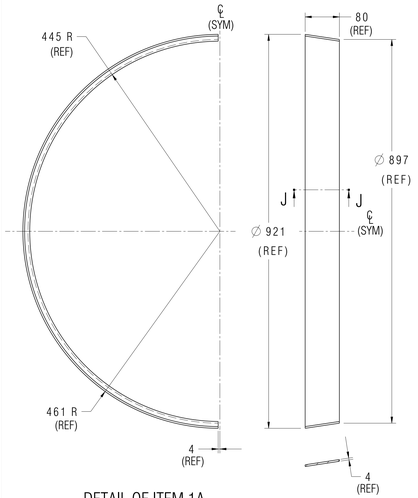

DETAIL OF ITEM 1A

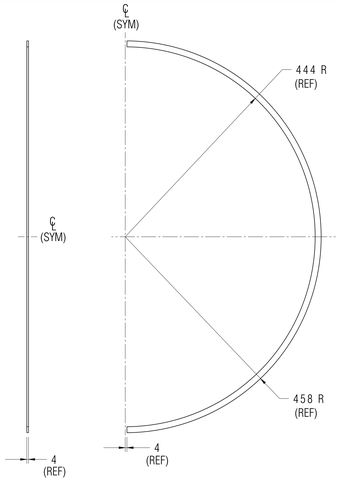

DETAIL OF ITEM 1C

1A	1	CENTRE MOULD	SA 516 GRADE 70	1490X520X6	
ITEM NO 1	QTY	DESCRIPTION	MATERIAL	STOCK SIZE(mm)	REMARKS

1C	1	SIDE FLANGE-2	SA 516 GRADE 70	1000X500X6	
ITEM NO 1	QTY	DESCRIPTION	MATERIAL	STOCK SIZE(mm)	REMARKS

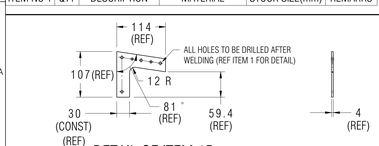

DETAIL OF ITEM 1D

1D	2	END FLANGE	SA 516 GRADE 70	160X130X6	
ITEM NO 1	QTY	DESCRIPTION	MATERIAL	STOCK SIZE(mm)	REMARKS

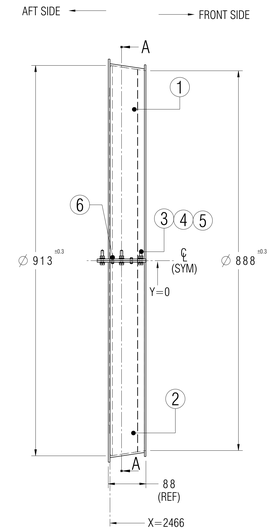

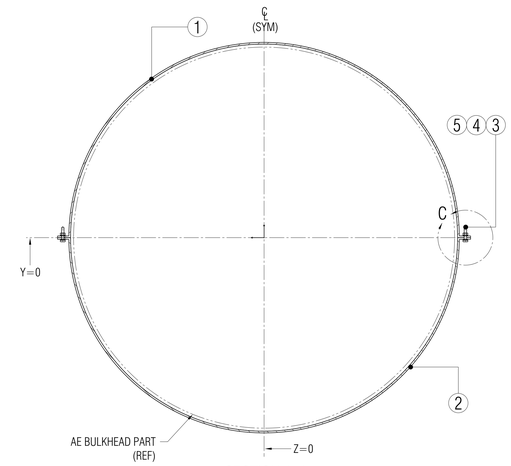

SECTION A-A

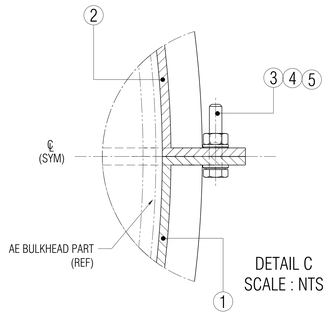

DETAIL C
SCALE : NTS

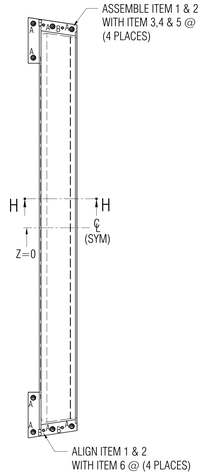

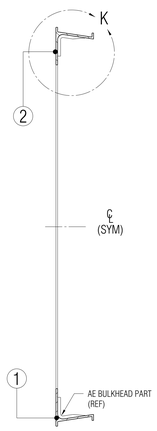

SECTION H-H

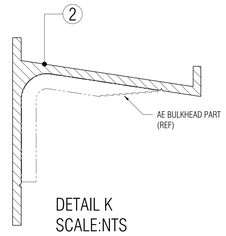

DETAIL K
SCALE:NTS

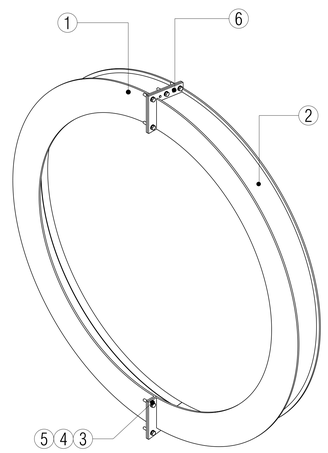

B3 LAYUP TOOL ASSEMBLY

NOTE:
1. FOR THEORETICAL CONTOUR NMG REFER CATIA MODEL NMG-RVS-S3- 0127
AND FOR STATION DIAGRAM REFER DWG NO. 0127-000S-000-000.
2. TOOL CONTOUR OFFSET BY 0.2MM OUTSIDE FROM THE PART OUTER SURFACE FOR TOOL TECH AND PEEL PLY ALLOWANCES.
3. TOLERANCE ON ITEM 1 & 2 THE CONTOUR SURFACE IS ±0.15MM INDIVIDUALLY AND AFTER ASSEMBLY OF ITEM 1 & 2
THE TOLERANCE ON CONTOUR SURFACE IS ±0.3MM AND INSPECT USING CMM/ LASER TRACKER.
4. IN ITEM 1 & ITEM 2 WELDING SHOULD BE LEAK PROOF WELDING, AND TO BE QUALIFIED BY RADIOGRAPHY/NDT.
5. ROUND OF ALL SHARP CORNERS AND EDGES BY 0.5R
6. STRESS RELIEVE THE TOOL AFTER FORMING, WELDING AND BEFORE FINAL MACHINING.
7. ALL MACHINED SURFACES/PLANES SHOULD BE HARD CHROME FINISH. (OTHER AREA TO BE PAINTED
WITH HIGH TEMPERATURE SILVER PAINT TO WITHSTAND OPERATING TEMPERATURE OF 250°C).
8. ALL FASTENER BOLTS,NUTS AND WASHERS SHOULD BE HT 10.9 CLASS.
9. ACCEPTANCE OF VARIATION IN TOOL THICKNESS WITHIN ±1MM.
10. UNTOLERANCED DIMENSION CONFIRM TO IS 2102(PART-1)-COARSE.
11. MARK/TAG ON TOOL INDIVIDUALLY THUS

PROJECT - RVS-S3

TOOL NAME: LAYUP TOOL FOR BULKHEAD ASSEMBLY B3 (AE)
TOOL NO: 0127-1400TL-000-000
PART NAME: BULKHEAD ASSEMBLY B3 (AE)
PART NO: 0127-1400-000-0F0
TOOL CLEARED FOR INSPECTED DATE STAMP
SL NO.

FOR QUOTATION PURPOSE ONLY

6	4	DOWEL PIN	CMS	∅5X20	STD
5	20	WASHER	STEEL	ID6XOD12	HT 10.9 CLASS
4	10	M6 HEX NUT	STEEL	M6	HT 10.9 CLASS
3	10	M6 HEX BOLT	STEEL	M6X20	HT 10.9 CLASS
2	1	B3 LAYUP TOOL-2	SA 516 GRADE 70	REF. DETAIL DWG. TABLE	SYMMETRY OF ITEM 1
1	1	B3 LAYUP TOOL-1	SA 516 GRADE 70	REF. DETAIL DWG. TABLE	
ITEM NO	QTY	DESCRIPTION	MATERIALS	SPECIFICATIONS	REMARKS

DIMENSIONS IN MM EXCEPT NOTED

TITLE RVS - S3

LAYUP TOOL FOR
BULKHEAD ASSLY B3 (AE)

THIRD ANGLE PROJ.

SCALE 1:5 & NOTED

DWG. NO. 0127-1400TL-000-000

SHT: 1 OF 1

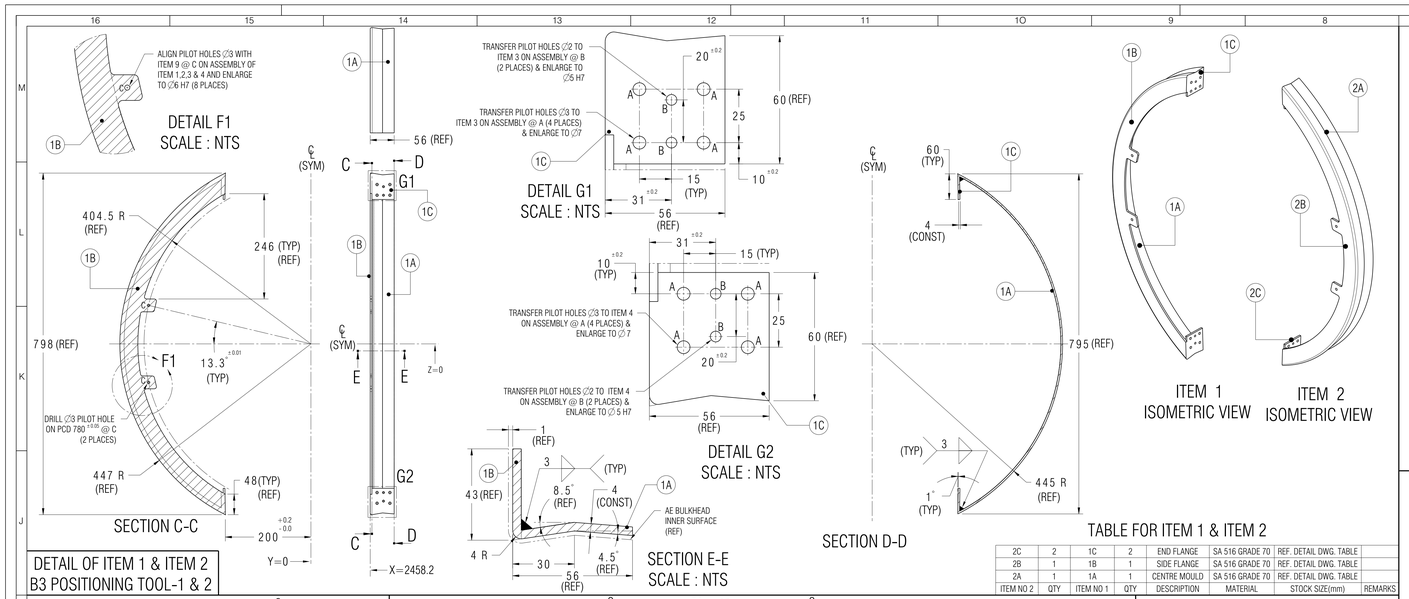

DETAIL OF ITEM 1 & ITEM 2
B3 POSITIONING TOOL-1 & 2

TABLE FOR ITEM 1 & ITEM 2

2C	2	1C	2	END FLANGE	SA 516 GRADE 70	REF. DETAIL DWG. TABLE	
2B	1	1B	1	SIDE FLANGE	SA 516 GRADE 70	REF. DETAIL DWG. TABLE	
2A	1	1A	1	CENTRE MOULD	SA 516 GRADE 70	REF. DETAIL DWG. TABLE	
ITEM NO 2	QTY	ITEM NO 1	QTY	DESCRIPTION	MATERIAL	STOCK SIZE(mm)	REMARKS

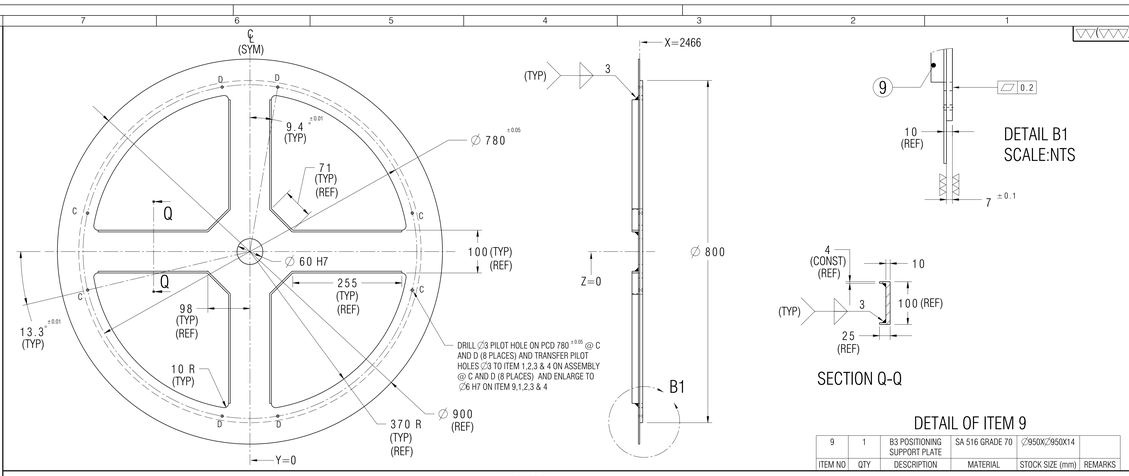

DETAIL OF ITEM 9

9	1	B3 POSITIONING SUPPORT PLATE	SA 516 GRADE 70	∅950X∅950X14	
ITEM NO	QTY	DESCRIPTION	MATERIAL	STOCK SIZE (mm)	REMARKS

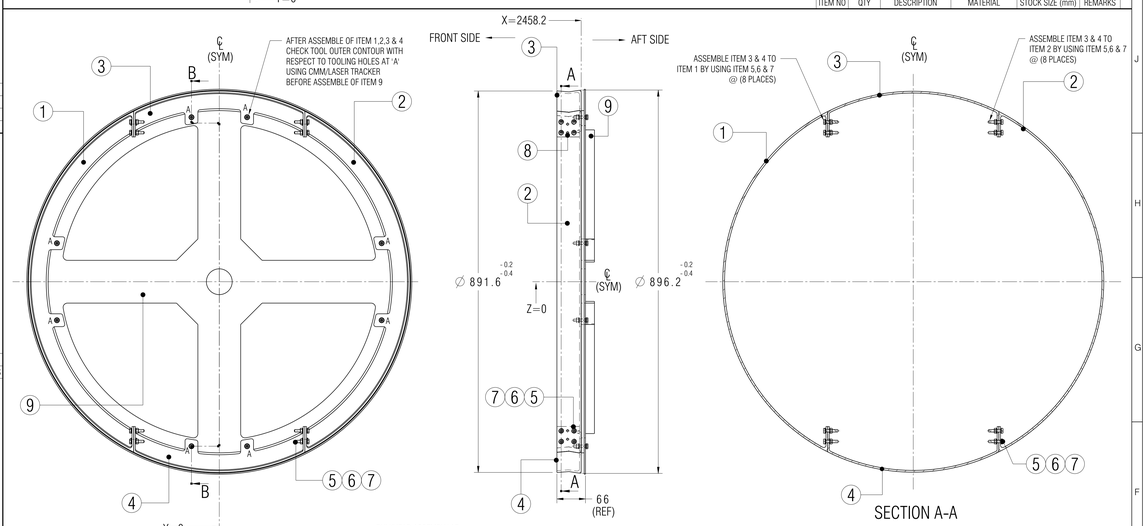

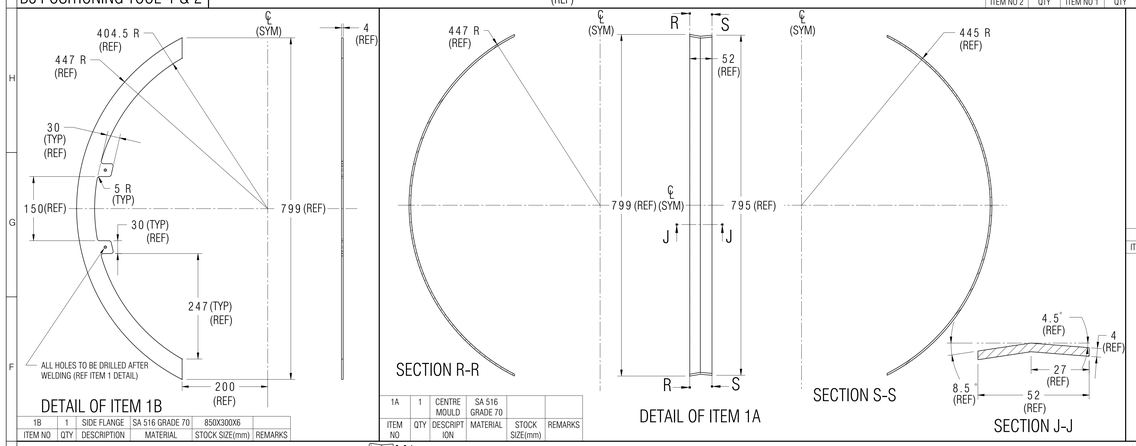

1B	1	SIDE FLANGE	SA 516 GRADE 70	850X300X6	
ITEM NO	QTY	DESCRIPTION	MATERIAL	STOCK SIZE(mm)	REMARKS

1A	1	CENTRE MOULD	SA 516 GRADE 70		
ITEM NO	QTY	DESCRIPTION	MATERIAL	STOCK SIZE(mm)	REMARKS

1C	2	END FLANGE	SA 516 GRADE 70	100X100X6	
ITEM NO	QTY	DESCRIPTION	MATERIAL	STOCK SIZE(mm)	REMARKS

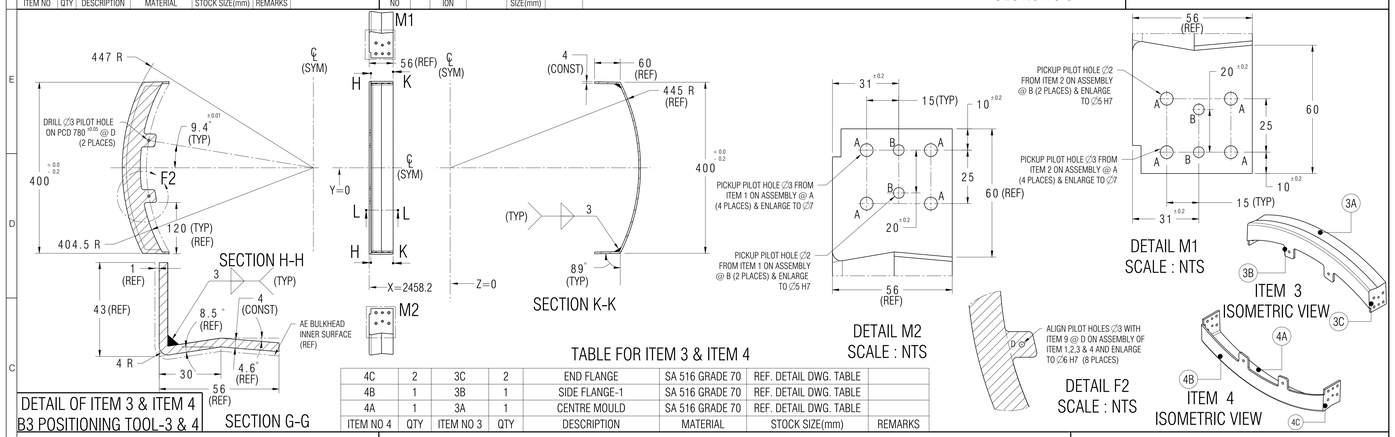

DETAIL OF ITEM 3 & ITEM 4
B3 POSITIONING TOOL-3 & 4

TABLE FOR ITEM 3 & ITEM 4

4C	2	3C	2	END FLANGE	SA 516 GRADE 70	REF. DETAIL DWG. TABLE	
4B	1	3B	1	SIDE FLANGE-1	SA 516 GRADE 70	REF. DETAIL DWG. TABLE	
4A	1	3A	1	CENTRE MOULD	SA 516 GRADE 70	REF. DETAIL DWG. TABLE	
ITEM NO 4	QTY	ITEM NO 3	QTY	DESCRIPTION	MATERIAL	STOCK SIZE(mm)	REMARKS

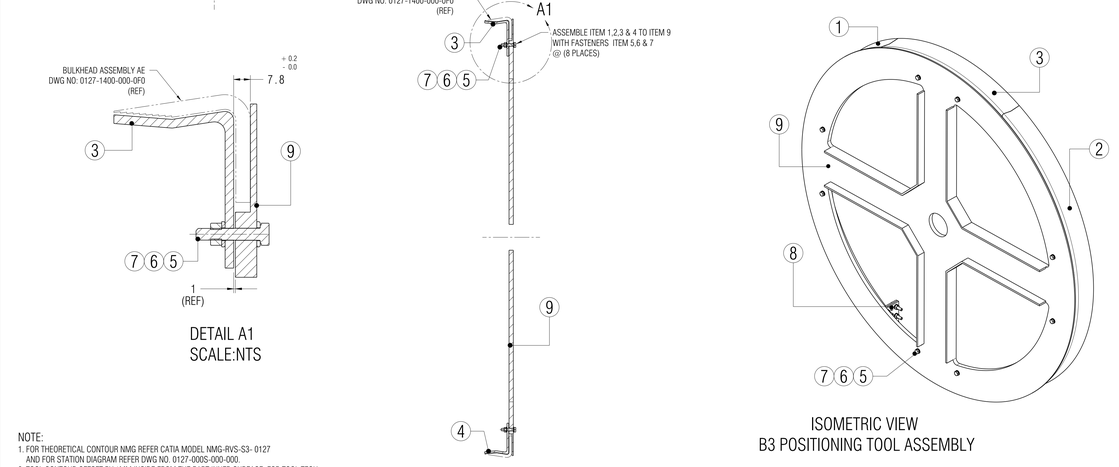

NOTE:
1. FOR THEORETICAL CONTOUR NMG REFER CATIA MODEL NMG-RVS-S3- 0127 AND FOR STATION DIAGRAM REFER DWG NO. 0127-000S-000-000.
2. TOOL CONTOUR OFFSET BY 1MM INSIDE FROM THE PART INNER SURFACE FOR TOOL TECH, PEEL PLY AND GREEN STAGE PART THICKNESS ALLOWANCES.
3. TOLERANCE ON ITEM 1, 2, 3 & 4 THE CONTOUR SURFACE IS ±0.15MM INDIVIDUALLY AND AFTER ASSEMBLY OF ITEM 1,2,3 & 4 THE TOLERANCE ON CONTOUR SURFACE IS ±0.3MM AND INSPECT USING CMM/ LASER TRACKER.
4. IN ITEM 1,2,3 & 4 WELDING SHOULD BE LEAK PROOF WELDING, AND TO BE QUALIFIED BY RADIOGRAPHY/NDT.
5. ROUND OF ALL SHARP CORNERS AND EDGES BY 0.5R
6. STRESS RELIEVE THE TOOL AFTER FORMING, WELDING AND BEFORE FINAL MACHINING.
7. ALL MACHINED SURFACES/PLANES SHOULD BE HARD CHROME FINISH. (OTHER AREA TO BE PAINTED WITH HIGH TEMPERATURE SILVER PAINT TO WITHSTAND OPERATING TEMPERATURE OF 250°C).
8. ALL FASTENER BOLTS,NUTS AND WASHERS SHOULD BE HT 10.9 CLASS.
9. ACCEPTANCE OF VARIATION IN TOOL THICKNESS WITHIN ±1MM.
10. UNTOLERANCED DIMENSION CONFIRM TO IS 2102(PART-1)-COARSE.
11. MARK/TAG ON TOOL INDIVIDUALLY THUS

9	1	B3 POSITIONING SUPPORT PLATE	SA 516 GRADE 70	REF. DETAIL DWG. TABLE	
8	8	DOWEL PIN	CMS	∅5X16	STD
7	16	M6 HEX NUT	STEEL	M6	HT 10.9 CLASS
6	32	WASHER	STEEL	ID6XOD12	HT 10.9 CLASS
5	16	M6 HEX BOLT	STEEL	M6X30	HT 10.9 CLASS
4	1	B3 POSITIONING TOOL-4	SA 516 GRADE 70	REF. DETAIL DWG. TABLE	SYMMETRY OF ITEM 3
3	1	B3 POSITIONING TOOL-3	SA 516 GRADE 70	REF. DETAIL DWG. TABLE	
2	1	B3 POSITIONING TOOL-2	SA 516 GRADE 70	REF. DETAIL DWG. TABLE	SYMMETRY OF ITEM 1
1	1	B3 POSITIONING TOOL-1	SA 516 GRADE 70	REF. DETAIL DWG. TABLE	
ITEM NO	QTY	DESCRIPTION	MATERIALS	SPECFICATIONS	REMARKS

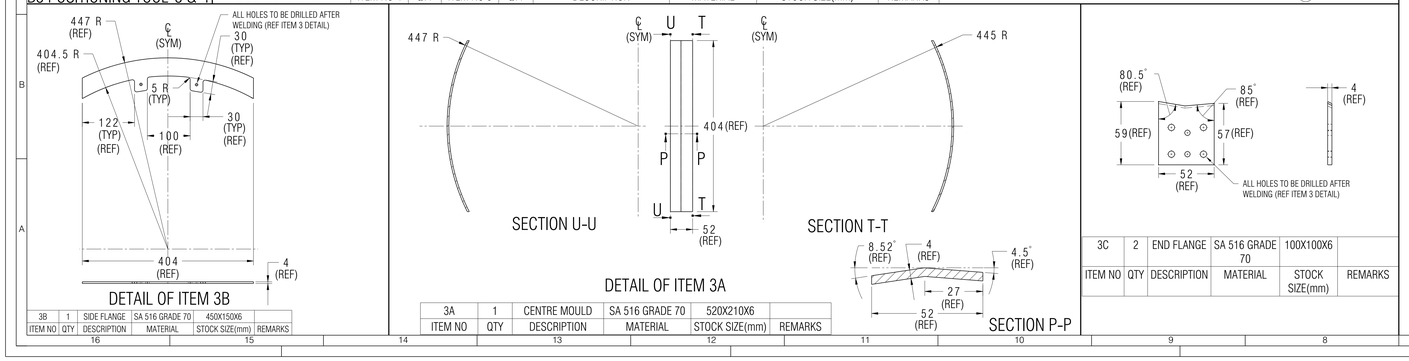

3B	1	SIDE FLANGE	SA 516 GRADE 70	450X150X6	
ITEM NO	QTY	DESCRIPTION	MATERIAL	STOCK SIZE(mm)	REMARKS

3A	1	CENTRE MOULD	SA 516 GRADE 70	520X210X6	
ITEM NO	QTY	DESCRIPTION	MATERIAL	STOCK SIZE(mm)	REMARKS

3C	2	END FLANGE	SA 516 GRADE 70	100X100X6	
ITEM NO	QTY	DESCRIPTION	MATERIAL	STOCK SIZE(mm)	REMARKS

PROJECT -RVS - S3
TOOL NAME: POSITIONING TOOL FOR BULKHEAD ASSEMBLY B3 (AE)
TOOL NO: 0127-1400TP-000-000
PART NAME: BULKHEAD ASSEMBLY B3 (AE)
PART NO: 0127-1400-000-0F0
TOOL CLEARED FOR INSPECTED DATE STAMP
SL NO.

FOR QUOTATION PURPOSE ONLY

DIMENSIONS IN MM EXCEPT NOTED

TITLE RVS - S3

POSITIONING TOOL FOR
BULKHEAD ASSEMBLY B3 (AE)

THIRD ANGLE PROJ. | SCALE 1:5 & NOTED | DWG. NO. 0127-1400TP-000-000 | SHT 1 OF 1

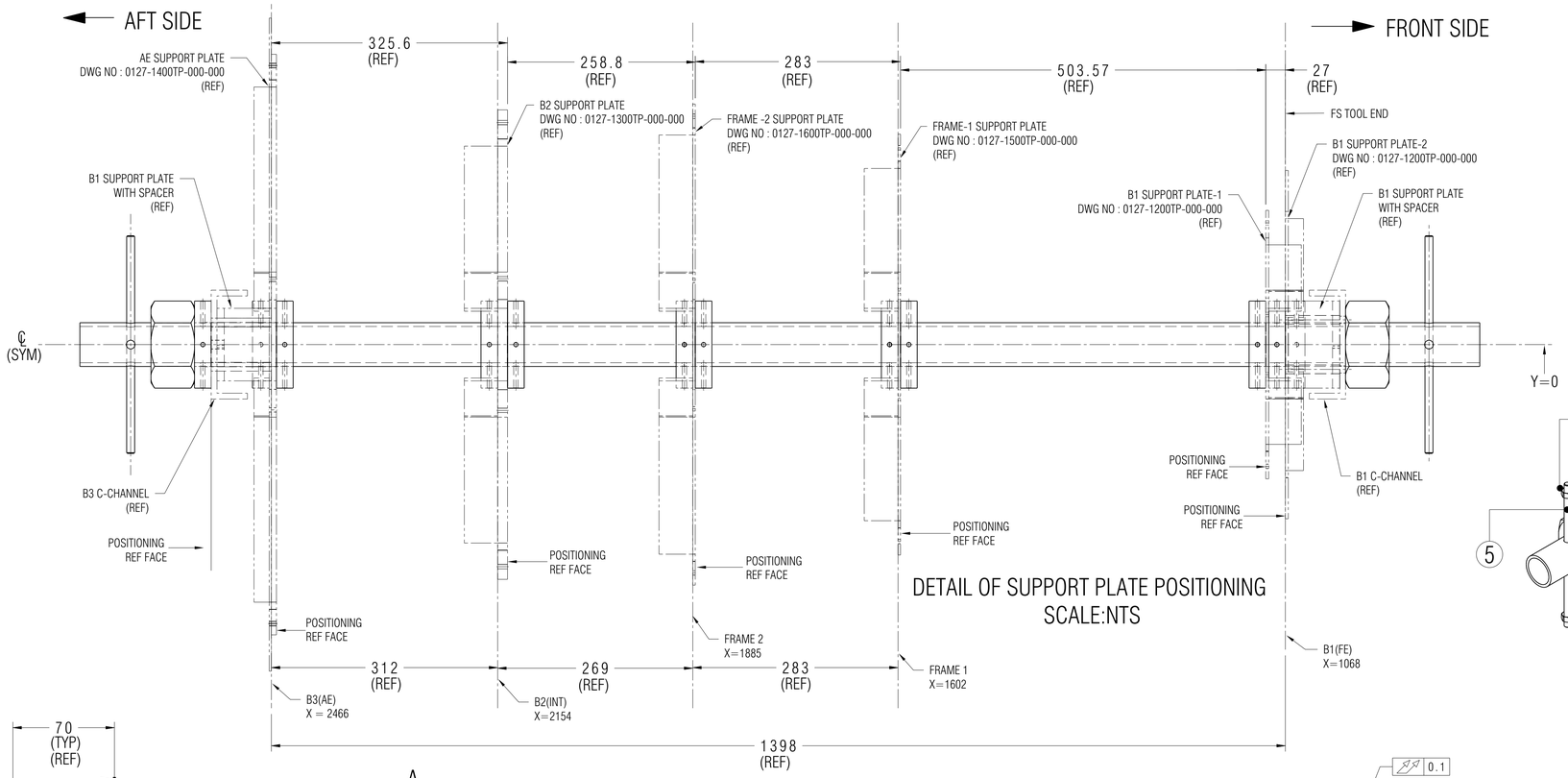

DETAIL OF SUPPORT PLATE POSITIONING
SCALE:NTS

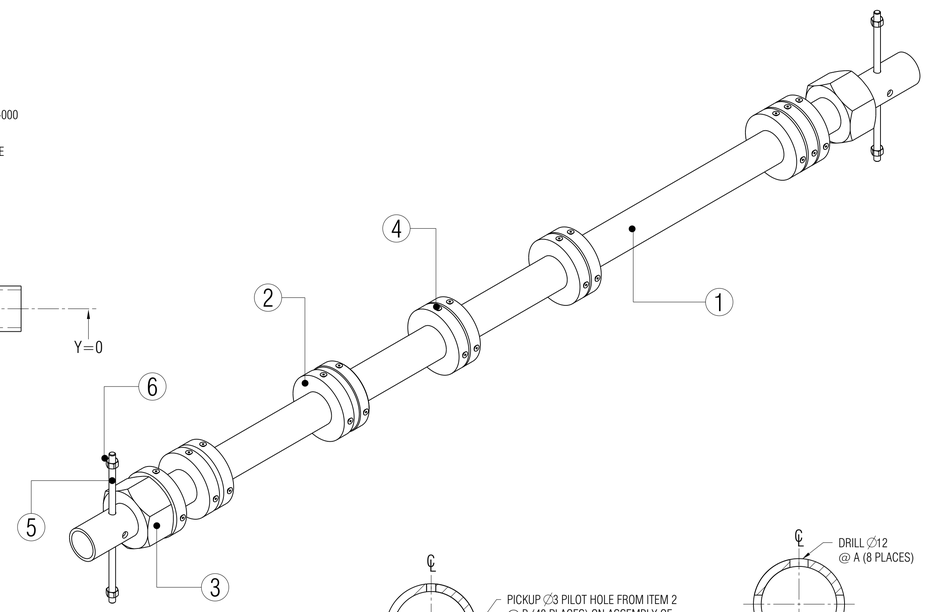

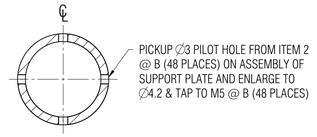

SECTION A-A

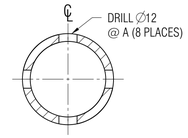

SECTION B-B

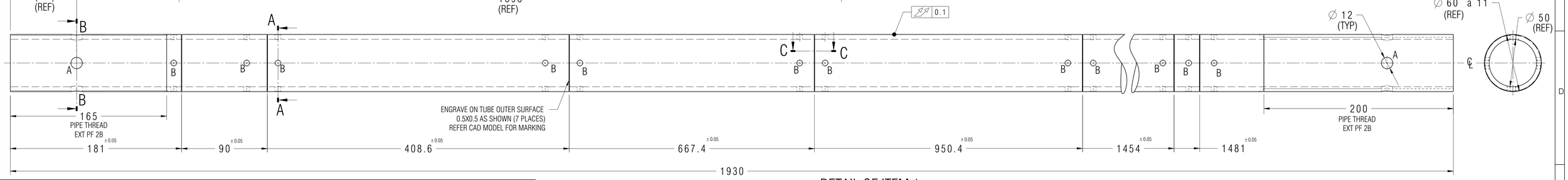

DETAIL OF ITEM 1

1	1	HEAVY STEEL TUBE ID 50X OD 60.3X4.5 THICK	HEAVY STEEL IS: 1161	ID 50XOD60.3X1930	IS:2643 (HFS)
ITEM NO	QTY	DESCRIPTION	MATERIAL	SIZE	REMARKS

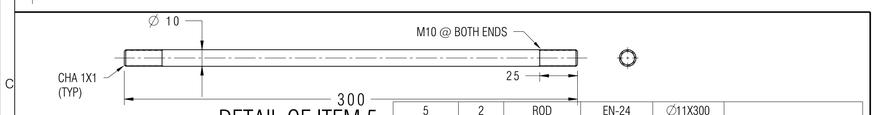

DETAIL OF ITEM 5

5	2	ROD	EN-24	∅11X300	
ITEM NO	QTY	DESCRIPTION	MATERIAL	SIZE	REMARKS

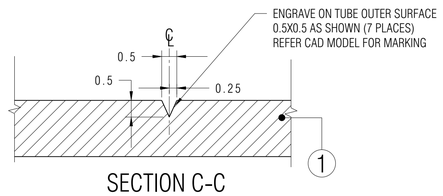

SECTION C-C
SCALE:NTS

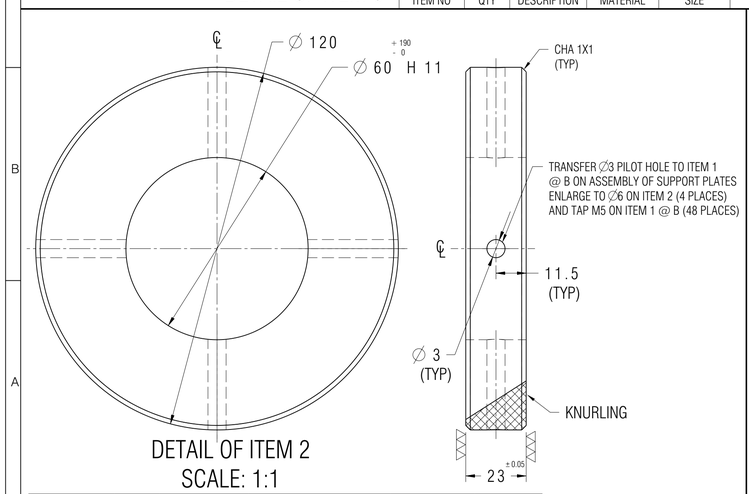

DETAIL OF ITEM 2
SCALE: 1:1

2	12	COLLAR	EN-24	∅120X25	
ITEM NO	QTY	DESCRIPTION	MATERIAL	SIZE	REMARKS

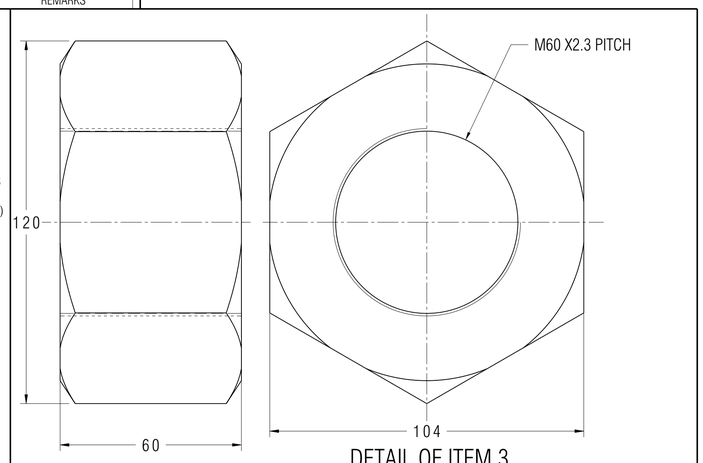

DETAIL OF ITEM 3
SCALE: 1:1

3	2	HEXAGONAL NUT	EN-24	∅120X60	
ITEM NO	QTY	DESCRIPTION	MATERIAL	SIZE	REMARKS

NOTE:
1. ROUND OF ALL SHARP CORNERS AND EDGES BY 0.5R
2. ALL FASTENER BOLTS,NUTS AND WASHERS SHOULD BE HT 10.9 CLASS.

6	4	M10 NUT	STEEL	M10	HT 10.9 CLASS
5	2	ROD	EN-24	REF.DETAIL DWG TABLE	
4	48	HEXAGON SOCKET HEAD CAP SCREW	STD	M5X40	IS:2269
3	2	HEXAGONAL NUT	EN-24	REF.DETAIL DWG TABLE	
2	12	COLLAR	EN-24	REF.DETAIL DWG TABLE	
1	1	STEEL TUBE	STEEL	REF.DETAIL DWG TABLE	
ITEM NO	QTY	DESCRIPTION	MATERIAL	STOCK SIZE(mm)	REMARKS

FOR QUOTATION PURPOSE ONLY

DIMENSIONS IN MM EXCEPT NOTED

TITLE RVS - S3

POSITIONING TOOL
TUBE AND COLLAR
FOR B1,B2,B3 BULKHEAD
AND FRAME-1 & 2 ASSEMBLY

THIRD ANGLE PROJ.

SCALE 1:2 & NOTED

DWG. NO. 0127-1000TP-000-000

SHT. 1 OF 1

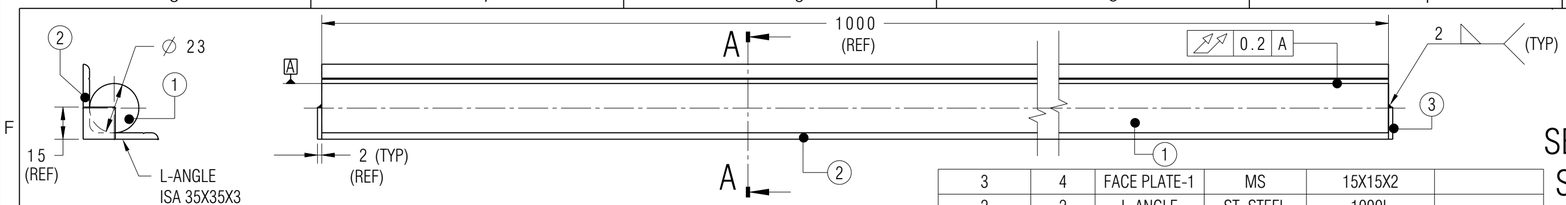

DETAIL OF B3 ROVING TOOL

ITEM NO	QTY	DESCRIPTION	MATERIAL	STOCK SIZE(mm)	REMARKS
3	4	FACE PLATE-1	MS	15X15X2	
2	2	L-ANGLE ISA 35X35X3	ST. STEEL IS 808	1000L	
1	2	ROD	MS	Ø25X1000	

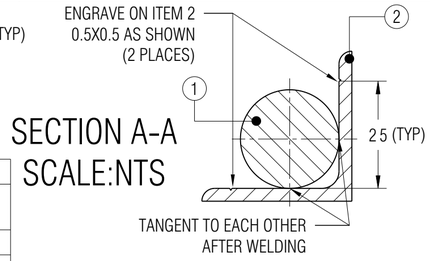

SECTION A-A
SCALE:NTS

PROJECT - RVS - S3
TOOL NAME: B3 ROVING TOOL
TOOL NO: 0127-1000R-000-000
PART NAME: BULKHEAD ASSEMBLY B3 (AE)
PART NO: 0127-1400-000-0F0
TOOL CLEARED FOR INSPECTED DATE STAMP
SL NO.

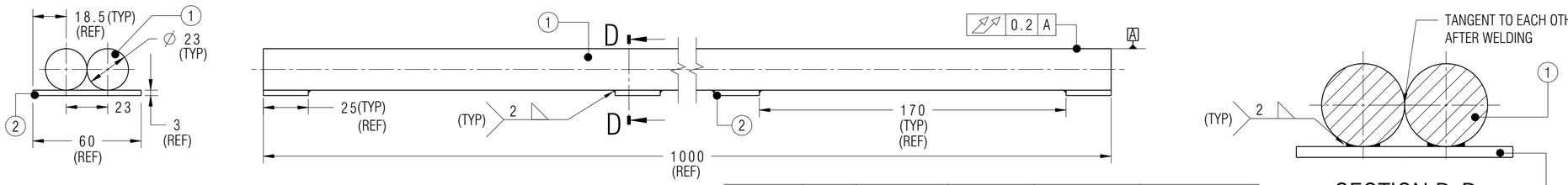

DETAIL OF B2 ROVING TOOL

ITEM NO	QTY	DESCRIPTION	MATERIAL	STOCK SIZE(mm)	REMARKS
2	12	BASE PLATE-1	MS	60X25X3	
1	2	ROD	MS	Ø25X1000	

SECTION D-D
SCALE:NTS

PROJECT - RVS - S3
TOOL NAME: B2 ROVING TOOL
TOOL NO: 0127-1000R-000-000
PART NAME: BULKHEAD ASSEMBLY B2 (INT)
PART NO: 0127-1300-000-0F0
TOOL CLEARED FOR INSPECTED DATE STAMP
SL NO.

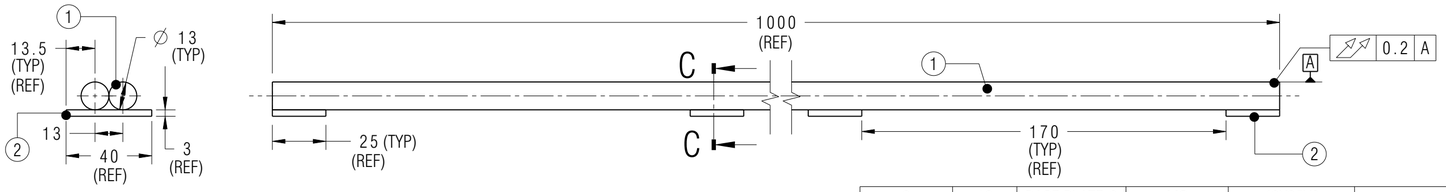

DETAIL OF FRAME-1 & 2 ROVING TOOL

ITEM NO	QTY	DESCRIPTION	MATERIAL	STOCK SIZE(mm)	REMARKS
2	12	BASE PLATE-2	MS	40X25X3	
1	2	ROD	MS	Ø15X1000	

SECTION C-C
SCALE:NTS

PROJECT - RVS - S3
TOOL NAME: FRAME 1 & 2 ROVING TOOLS
TOOL NO: 0127-1000R-000-000
PART NAME: FRAME - 1/ FRAME - 2
PART NO: 0127-1500-000-0F0/0127-1600-000-0F0
TOOL CLEARED FOR INSPECTED DATE STAMP
SL NO.

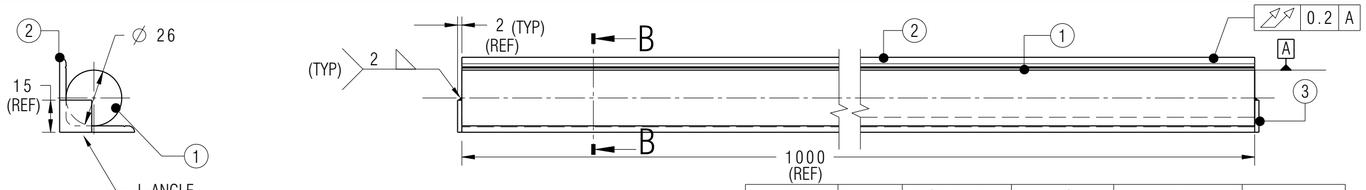

DETAIL OF B1 ROVING TOOL-1

ITEM NO	QTY	DESCRIPTION	MATERIAL	STOCK SIZE(mm)	REMARKS
3	4	FACE PLATE-1	MS	15X15X2	
2	2	L-ANGLE ISA 35X35X3	ST. STEEL IS 808	1000L	
1	2	ROD	MS	Ø26X1000	

SECTION B-B
SCALE:NTS

PROJECT - RVS - S3
TOOL NAME: B1 ROVING TOOL-1
TOOL NO: 0127-1000R-000-000
PART NAME: BULKHEAD ASSEMBLY B1 (FE)
PART NO: 0127-1200-000-0F0
TOOL CLEARED FOR INSPECTED DATE STAMP
SL NO.

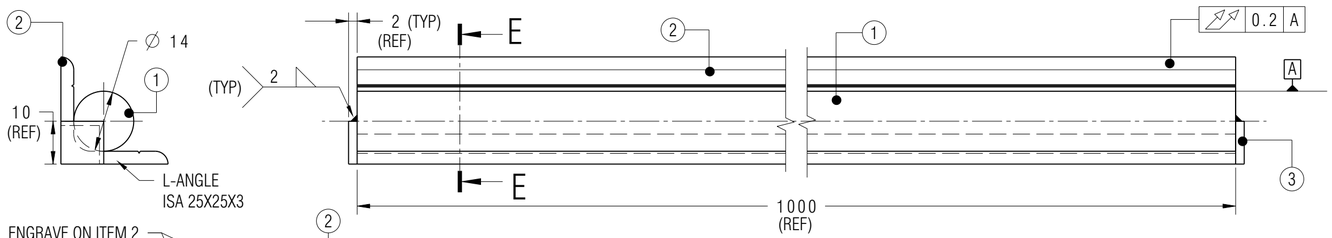

DETAIL OF B1 ROVING TOOL-2

ITEM NO	QTY	DESCRIPTION	MATERIAL	STOCK SIZE(mm)	REMARKS
3	4	FACE PLATE-1	MS	10X10X2	
2	2	L-ANGLE ISA 25X25X3	ST. STEEL IS 808	1000L	
1	2	ROD	MS	Ø14X1000	

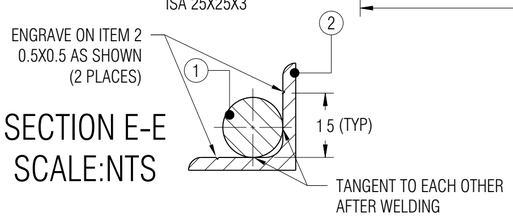

SECTION E-E
SCALE:NTS

PROJECT - RVS - S3
TOOL NAME: B1 ROVING TOOL-2
TOOL NO: 0127-1000R-000-000
PART NAME: BULKHEAD ASSEMBLY B1 (FE)
PART NO: 0127-1200-000-0F0
TOOL CLEARED FOR INSPECTED DATE STAMP
SL NO.

FOR QUOTATION PURPOSE ONLY

NOTE:
1. AFTER WELDING BOTH ROD AND L- AGLE FACE SHOULD TANGENT TO EACH OTHER
2. ROUND OF ALL SHARP CORNERS AND EDGES BY 0.5R
3. STRESS RELIEVE THE TOOL AFTER WELDING AND BEFORE FINAL MACHINING.

TITLE RVS - S3

DIMENSIONS IN MM EXCEPT NOTED

ROVING TOOLS FOR
B1,B2,B3 BULKHEAD AND FRAME -1 & 2

THIRD ANGLE PROJ.

SCALE 1:1 & NOTED

DWG. NO. 0127-1000R-000-000

SHT. 1 OF 1

BID-SECURING DECLARATION FORM

Date: _____

Bid No. _____

To (insert complete name and address of the purchaser)

I/We. The undersigned, declare that:

I/We understand that, according to your conditions, bids must be supported by a Bid Securing Declaration.

I/We accept that I/We may be disqualified from bidding for any contract with you for a period of one year from the date of notification if I am /We are in a breach of any obligation under the bid conditions, because I/We

(a)	have withdrawn/modified/amended, impairs or derogates from the tender, my/our Bid during the period of bid validity specified in the form of Bid; or
(b)	having been notified of the acceptance of our Bid by the purchaser during the period of bid validity (i) fail or refuse to execute the contract, if required, or (ii) fail or refuse to furnish the Performance Security, in accordance with the Instructions to Bidders.

I/We understand this Bid Securing Declaration shall cease to be valid if I am/we are not the successful Bidder, upon the earlier of (i) the receipt of your notification of the name of the successful Bidder; or (ii) thirty days after the expiration of the validity of my/our Bid.

Signed: (insert signature of person whose name and capacity are shown)
in the capacity of (insert legal capacity of person signing the Bid Securing Declaration).

Name: (insert complete name of person signing he Bid Securing Declaration)

Duly authorized to sign the bid for an on behalf of: (insert complete name of Bidder)

Dated on _____ day of _____(insert date of signing)

Corporate Seal (where appropriate)

Note:

1. In case of a Joint Venture, the Bid Securing Declaration must be in the name of all partners to the Joint Venture that submits the bid.
2. Bid Security declaration must be signed in by the Proprietor/CEO/MD or equivalent level of Officer of the company.