बिड संख्या/Bid Number: GEM/2026/B/8273943

दिनांक /Dated: 13-11-2026

बिड दस्तावेज़ / Bid Document

बिड विवरण/Bid Details	
बिड बंद होने की तारीख/समय /Bid End Date/Time	07-12-2026 11:00:00
बिड खुलने की तारीख/समय /Bid Opening Date/Time	08-12-2026 11:00:00
बिड पेशकश वैधता (बंद होने की तारीख से)/Bid Offer Validity (From End Date)	90 (Days)
मंत्रालय/राज्य का नाम/Ministry/State Name	Ministry Of Science And Technology
विभाग का नाम/Department Name	Department Of Scientific And Industrial Research (dsir)
संगठन का नाम/Organisation Name	Council Of Scientific And Industrial Research (csir)
कार्यालय का नाम/Office Name	Csir-national Aerospace Laboratories, Bengaluru
शिकायत निवारण के संपर्क विवरण/ Contact details of Grievance redressal	HOD Email id :vikash.mishra@csir.res.in Buyer Email id: malini.nal@nic.in
कुल मात्रा/Total Quantity	2
वस्तु श्रेणी /Item Category	Fabrication and supply of Rudder Horn, End ribs and Rear spar tools using SA 516 Gr 70 Steel materia , Fabrication and supply of Rudder rib layup tools and curing cores using AL 6082 / HE 30
GeMARPTS में खोजी गई स्ट्रिंग्स / Searched Strings used in GeMARPTS	Fabrication and supply of Rudder rib layup tools and curing cores using AL 6082 / HE 30 aluminum alloy materials
GeMARPTS में खोजा गया परिणाम / Searched Result generated in GeMARPTS	Category not available on GeM for the text string uploaded by the buyer
अधिसूचना के लिए चयनित प्रासंगिक श्रेणियाँ / Relevant Categories selected for notification	• Package No 4 - Atal Tinkering Lab of Niti Aayog Power Supply and Accessories and Safety Equipment • Package No. 3 Atal Tinkering Lab of Niti Aayog Mechanical, Electrical and Measurement Tools
वर्षों के अनुभव एवं टर्नओवर से एमएसई को छूट प्राप्त है / MSE Relaxation for Years Of Experience and Turnover	Yes | Complete
स्टार्टअप के लिए अनुभव के वर्षों और टर्नओवर से छूट प्रदान की गई है / Startup Relaxation for Years Of Experience and Turnover	Yes | Complete

बिड विवरण/Bid Details	
विक्रेता से मांगे गए दस्तावेज़/Document required from seller	Experience Criteria,Certificate (Requested in ATC),OEM Authorization Certificate,Additional Doc 1 (Requested in ATC),Additional Doc 2 (Requested in ATC),Compliance of BoQ specification and supporting document *In case any bidder is seeking exemption from Experience / Turnover Criteria, the supporting documents to prove his eligibility for exemption must be uploaded for evaluation by the buyer
क्या आप निविदाकारों द्वारा अपलोड किए गए दस्तावेज़ों को निविदा में भाग लेने वाले सभी निविदाकारों को दिखाना चाहते हैं? संदर्भ मेनू है/Do you want to show documents uploaded by bidders to all bidders participated in bid?	Yes (Documents submitted as part of a clarification or representation during the tender/bid process will also be displayed to other participated bidders after log in)
बिड लगाने की समय सीमा स्वतः नहीं बढ़ाने के लिए आवश्यक बिड की संख्या। / Minimum number of bids required to disable automatic bid extension	3
दिनों की संख्या, जिनके लिए बिड लगाने की समय-सीमा बढ़ाई जाएगी। / Number of days for which Bid would be auto-extended	7
ऑटो एक्सटेंशन अधिकतम कितनी बार किया जाना है। / Number of Auto Extension count	1
बिड से रिवर्स नीलामी सक्रिय किया/Bid to RA enabled	No
बिड का प्रकार/Type of Bid	Two Packet Bid
प्राथमिक उत्पाद श्रेणी/Primary product category	Fabrication and supply of Rudder Horn, End ribs and Rear spar tools using SA 516 Gr 70 Steel materia
तकनीकी मूल्यांकन के दौरान तकनीकी स्पष्टीकरण हेतु अनुमत समय /Time allowed for Technical Clarifications during technical evaluation	5 Days
निरीक्षण आवश्यक (सूचीबद्ध निरीक्षण प्राधिकरण /जेम के साथ पूर्व पंजीकृत एजेंसियों द्वारा)/Inspection Required (By Empanelled Inspection Authority / Agencies pre-registered with GeM)	No
मूल्यांकन पद्धति/Evaluation Method	Item wise evaluation
वित्तीय दस्तावेज की आवश्यकता है / Financial Document Required	Yes
मध्यस्थता खंड/Arbitration Clause	No
सुलह खंड/Mediation Clause	No

ईएमडी विवरण/EMD Detail

आवश्यकता/Required	No

ईपीबीजी विवरण /ePBG Detail

एडवाइजरी बैंक/Advisory Bank	State Bank of India
ईपीबीजी प्रतिशत (%)/ePBG Percentage(%)	3.00
ईपीबीजी की आवश्यक अवधि (माह) /Duration of ePBG required (Months).	14

(a).ईएमडी और संपादन जमानत राशि, जहां यह लागू होती है, लाभार्थी के पक्ष में होनी चाहिए। / EMD & Performance security should be in favour of Beneficiary, wherever it is applicable.

लाभार्थी /Beneficiary :
THE DIRECTOR, CSIR-NAL
CSIR-National Aerospace Laboratories, Bengaluru, Department of Scientific and Industrial Research (DSIR), Council of Scientific and Industrial Research (CSIR), Ministry of Science and Technology
(The Director)

बोली विभाजन लागू नहीं किया गया/ Bid splitting not applied.

एमआईआई खरीद वरीयता / MII Purchase Preference

एमआईआई खरीद वरीयता / MII Purchase Preference	Yes
मेक इन इंडिया विक्रेताओं को खरीद में प्राथमिकता, यदि उनका मूल्य L1+X% तक की सीमा में है / Purchase Preference to MII sellers availabele upto price within L1+X%	20
मेक इन इंडिया खरीद में प्राथमिकता के लिए बिड की मात्रा का अधिकतम प्रतिशत / Maximum Percentage of Bid quantity for MII purchase preference	50
सार्वजनिक खरीद (मेक-इन-इंडिया को प्राथमिकता) आदेश 2017 के अनुसार केवल क्लास 1/क्लास 2 के स्थानीय आपूर्तिकर्ताओं को ही भागीदारी की अनुमति है दिनांक 16.09.2020 (समय-समय पर संशोधित एवं लागू) / Allow participation only from Class 1/Class 2 local suppliers as per the Public procurement(Preference to Make-in-india) order 2017 date 16.09.2020(as amended and applicable time to time)	Yes, in compliance with the MII ORDER : DPIIT Order(as amended and applicable time to time)

एमएसई खरीद वरीयता/MSE Purchase Preference

एमएसई खरीद वरीयता/MSE Purchase Preference	Yes
सूक्ष्म और लघु उद्यम मूल उपकरण निर्माताओं/सेवा प्रदाता को खरीद में प्राथमिकता, यदि उनका मूल्य L1+X% / Purchase Preference to MSE OEMs/ Service Provider available upto price within L1+X%	15

सूक्ष्म और लघु उद्यम मूल उपकरण निर्माता/सेवा प्रदाता को खरीद में प्राथमिकता के लिए बिड की मात्रा का अधिकतम प्रतिशत / Percentage of Bid quantity/amount for MSE OEMs/ Service Provider Purchase preference	25

1. If the bidder is a Micro or Small Enterprise as per latest orders issued by Ministry of MSME, the bidder shall be relaxed from the eligibility criteria of "Experience Criteria" as defined above subject to meeting of quality and technical specifications. The bidder seeking Relaxation from Experience Criteria, shall upload the supporting documents to prove his eligibility for Relaxation.
2. If the bidder is a Micro or Small Enterprise (MSE) as per latest orders issued by Ministry of MSME, the bidder shall be relaxed from the eligibility criteria of "Bidder Turnover" as defined above subject to meeting of quality and technical specifications. If the bidder itself is MSE OEM of the offered products, it would be relaxed from the "OEM Average Turnover" criteria also subject to meeting of quality and technical specifications. The bidder seeking Relaxation from Turnover, shall upload the supporting documents to prove his eligibility for Relaxation.
3. If the bidder is a DPIIT registered Startup, the bidder shall be relaxed from the the eligibility criteria of "Experience Criteria" as defined above subject to their meeting of quality and technical specifications. The bidder seeking Relaxation from Experience Criteria, shall upload the supporting documents to prove his eligibility for Relaxation.
4. If the bidder is a DPIIT registered Startup, the bidder shall be relaxed from the the eligibility criteria of "Bidder Turnover" as defined above subject to their meeting of quality and technical specifications. If the bidder is DPIIT Registered OEM of the offered products, it would be relaxed from the "OEM Average Turnover" criteria also subject to meeting of quality and technical specifications. The bidder seeking Relaxation from Turnover shall upload the supporting documents to prove his eligibility for Relaxation.
5. Preference to Make In India products (For bids < 200 Crore):Preference shall be given to Class 1 local supplier as defined in public procurement (Preference to Make in India), Order 2017 as amended from time to time and its subsequent Orders/Notifications issued by concerned Nodal Ministry for specific Goods/Products. The minimum local content to qualify as a Class 1 local supplier is denoted in the bid document. If the bidder wants to avail the Purchase preference, the bidder must upload a certificate from the OEM regarding the percentage of the local content and the details of locations at which the local value addition is made along with their bid, failing which no purchase preference shall be granted. In case the bid value is more than Rs 10 Crore, the declaration relating to percentage of local content shall be certified by the statutory auditor or cost auditor, if the OEM is a company and by a practicing cost accountant or a chartered accountant for OEMs other than companies as per the Public Procurement (preference to Make-in -India) order 2017 dated 04.06.2020. Only Class-I and Class-II Local suppliers as per MII order dated 4.6.2020 will be eligible to bid. Non - Local suppliers as per MII order dated 04.06.2020 are not eligible to participate. However, eligible micro and small enterprises will be allowed to participate .The buyers are advised to refer the OM No.F.1/4/2021-PPD dated 18.05.2023.
OM_No.1_4_2021_PPD_dated_18.05.2023 for compliance of Concurrent application of Public Procurement Policy for Micro and Small Enterprises Order, 2012 and Public Procurement (Preference to Make in India) Order, 2017 and its subsequent Orders/Notifications issued by concerned Ministry .Benefits of MSE will be allowed only if seller/service provider is validated on-line in GeM profile as well as validated and approved by Buyer after evaluation of documents submitted.

6. **Purchase preference to Micro and Small Enterprises (MSEs):** Purchase preference will be given to MSEs having valid Udyam Certificate and whose credentials are validated online through Udyam Registration portal as defined in Public Procurement Policy for Micro and Small Enterprises (MSEs) Order, 2012 dated 23.03.2012 issued by Ministry of Micro, Small and Medium Enterprises and its subsequent Orders/Notifications issued by concerned Ministry. If the bidder wants to avail themselves of the Purchase preference, the bidder must be the manufacturer / OEM of the offered product on GeM. In respect of bid for Services, the bidder must be the Service provider of the offered Service. Traders are excluded from the purview of Public Procurement Policy for Micro and Small Enterprises and hence resellers offering products manufactured by some other OEM are not eligible for any purchase preference. Relevant documentary evidence in this regard shall be uploaded along with the bid in respect of the offered product or service, and Buyer will decide eligibility for purchase preference based on documentary evidence submitted in case of product bids, whereas in case of services the eligibility is automatically validated. If L-1 is not an MSE and MSE Seller (s) has / have quoted price within L-1+ 15% (Selected by Buyer) of margin of purchase preference /price band defined in relevant policy, such MSE Seller shall be given opportunity to match L-1 price and contract will be awarded for 25% (selected by Buyer) percentage of total quantity. The buyers are advised to refer the OM_No.1_4_2021_PPD_dated_18.05.2023 for compliance of Concurrent application of Public Procurement Policy for Micro and Small Enterprises Order, 2012 and Public Procurement (Preference to Make in India) Order, 2017. Benefits of MSE will be allowed only if seller is validated on-line in GeM profile as well as validated and approved by Buyer after evaluation of documents submitted.

7. Estimated Bid Value indicated above is being declared solely for the purpose of guidance on EMD amount and for determining the Eligibility Criteria related to Turn Over, Past Performance and Project / Past Experience etc. This has no relevance or bearing on the price to be quoted by the bidders and is also not going to have any impact on bid participation. Also this is not going to be used as a criteria in determining reasonableness of quoted prices which would be determined by the buyer based on its own assessment of reasonableness and based on competitive prices received in Bid / RA process.

मूल्यांकन विधि(मदवार मूल्यांकन विधि) / Evaluation Method (Item Wise Evaluation Method)

Contract will be awarded schedule wise and the determination of L1 will be done separately for each schedule. The details of item-consignee combination covered under each schedule are as under:

मूल्यांकन अनुसूचियां / **Evaluation Schedules**	वस्तु/श्रेणी / **Item/Category**	मात्रा / **Quantity**
Schedule 1	Fabrication And Supply Of Rudder Horn, End Ribs And Rear Spar Tools Using Sa 516 Gr 70 Steel Materia	1
Schedule 2	Fabrication And Supply Of Rudder Rib Layup Tools And Curing Cores Using Al 6082 / He 30	1

Fabrication And Supply Of Rudder Horn, End Ribs And Rear Spar Tools Using SA 516 Gr 70 Steel Materia (1 set)

(क्रमशः श्रेणी 1 और श्रेणी 2 के स्थानीय आपूर्तिकर्ता के रूप में अर्हता प्राप्त करने के लिए आवश्यक/Minimum 50% and 20% Local Content required for qualifying as Class 1 and Class 2 Local Supplier respectively)

तकनीकी विशिष्टियाँ /Technical Specifications

क्रेता विशिष्टि दस्तावेज़ /Buyer Specification Document	Download

परेषिती/रिपोर्टिंग अधिकारी तथा मात्रा/Consignees/Reporting Officer and Quantity

क्र.सं./S.No.	परेषिती/रिपोर्टिंग अधिकारी /Consignee Reporting/Officer	पता/Address	मात्रा /Quantity	डिलीवरी के दिन/Delivery Days
1	E Damodara	560017,Old Airport Road, Kodihalli, Bangalore - 560 017,	1	210

Fabrication And Supply Of Rudder Rib Layup Tools And Curing Cores Using AL 6082 / HE 30 (1 set)

(क्रमशः श्रेणी 1 और श्रेणी 2 के स्थानीय आपूर्तिकर्ता के रूप में अर्हता प्राप्त करने के लिए आवश्यक/Minimum 50% and 20% Local Content required for qualifying as Class 1 and Class 2 Local Supplier respectively)

तकनीकी विशिष्टियाँ /Technical Specifications

क्रेता विशिष्टि दस्तावेज़ /Buyer Specification Document	Download

परेषिती/रिपोर्टिंग अधिकारी तथा मात्रा/Consignees/Reporting Officer and Quantity

क्र.सं./S.No.	परेषिती/रिपोर्टिंग अधिकारी /Consignee Reporting/Officer	पता/Address	मात्रा /Quantity	डिलीवरी के दिन/Delivery Days
1	E Damodara	560017,Old Airport Road, Kodihalli, Bangalore - 560 017,	1	210

क्रेता द्वारा जोड़ी गई बिड की विशेष शर्तें/Buyer Added Bid Specific Terms and Conditions

1. **Generic**

   OPTION CLAUSE: The Purchaser reserves the right to increase or decrease the quantity to be ordered up to 25 percent of bid quantity at the time of placement of contract. The purchaser also reserves the right to increase the ordered quantity up to 25% of the contracted quantity during the currency of the contract at the contracted rates. The delivery period of quantity shall commence from the last date of original delivery order and in cases where option clause is exercised during the extended delivery period the additional time shall commence from the last date of extended delivery period. The additional delivery time shall be (Increased quantity ÷ Original quantity) × Original delivery period (in days), subject to minimum of 30 days. If the original delivery period is less than 30 days, the additional time equals the original delivery period. The Purchaser may extend this calculated delivery duration up to the original delivery period while exercising the option clause. Bidders must comply with these terms.

2. **Service & Support**

   Availability of Service Centres: Bidder/OEM must have a Functional Service Centre in the State of each Consignee's Location in case of carry-in warranty. (Not applicable in case of goods having on-site warranty). If service center is not already there at the time of bidding, successful bidder / OEM shall have to establish one within 30 days of award of contract. Payment shall be released only after submission of documentary evidence of having Functional Service Centre.

3. **Turnover**

   Bidder Turn Over Criteria: The minimum average annual financial turnover of the bidder during the last three years, ending on 31st March of the previous financial year, should be as indicated in the bid document. Documentary evidence in the form of certified Audited Balance Sheets of relevant periods or a certificate from the Chartered Accountant / Cost Accountant indicating the turnover details for the relevant period shall be uploaded with the bid. In case the date of constitution / incorporation of the bidder is less than 3 year old, the average turnover in respect of the completed financial years after the date of constitution shall be taken into account for this criteria.

4. **Certificates**

   Bidder's offer is liable to be rejected if they don't upload any of the certificates / documents sought in the Bid document, ATC and Corrigendum if any.

5. **Generic**

   Bidders are advised to check applicable GST on their own before quoting. Buyer will not take any responsibility in this regards. GST reimbursement will be as per actuals or as per applicable rates (whichever is lower), subject to the maximum of quoted GST %.

6. **Buyer Added Bid Specific ATC**

Buyer Added text based ATC clauses

Following documents are to be submitted as per tender requirement:

· Bid Securing declaration

· Schedule of requirement as per chapter 3

· Detailed Technical Specification as per Chapter 4

· Qualification and eligibility criteria as per Chapter 6

· Standard Forms / Annexures as per Chapter 8,

· Deviation Statement Form Part I & II as per Annexure M

. Terms and Conditions

.

7. **Buyer Added Bid Specific ATC**

   Buyer uploaded ATC document Click here to view the file.

8. **Warranty**

   Warranty period of the supplied products shall be 1 years from the date of final acceptance of goods or after completion of installation, commissioning & testing of goods (if included in the scope of supply), at consignee location. OEM Warranty certificates must be submitted by Successful Bidder at the time of delivery of Goods. The seller should guarantee the rectification of goods in case of any break down during the guarantee period. Seller should have well established Installation, Commissioning, Training, Troubleshooting and Maintenance Service group in INDIA for attending the after sales service. Details of Service Centres near consignee destinations are to be uploaded along with the bid.

9. **Service & Support**

   Dedicated /toll Free Telephone No. for Service Support : BIDDER/OEM must have Dedicated/toll Free Telephone No. for Service Support.

10. **Generic**

    Data Sheet of the product(s) offered in the bid, are to be uploaded along with the bid documents. Buyers can match and verify the Data Sheet with the product specifications offered. In case of any unexplained mismatch of technical parameters, the bid is liable for rejection.

11. **Service & Support**

    Escalation Matrix For Service Support : Bidder/OEM must provide Escalation Matrix of Telephone Numbers for Service Support.

12. **Generic**

    Installation, Commissioning, Testing, Configuration, Training (if any - which ever is applicable as per scope of supply) is to be carried out by OEM / OEM Certified resource or OEM authorised Reseller.

13. **Generic**

    IT equipment shall be IPv6 ready from day one.

14. **Certificates**

    ISO 9001: The bidder or the OEM of the offered products must have ISO 9001 certification.

15. **Generic**

Malicious Code Certificate:

The seller should upload following certificate in the bid:-
(a) This is to certify that the Hardware and the Software being offered, as part of the contract, does not contain Embedded Malicious code that would activate procedures to :-

(i) Inhibit the desires and designed function of the equipment.
(ii) Cause physical damage to the user or equipment during the exploitation.
(iii) Tap information resident or transient in the equipment/network.

(b) The firm will be considered to be in breach of the procurement contract, in case physical damage, loss of information or infringements related to copyright and Intellectual Property Right (IPRs) are caused due to activation of any such malicious code in embedded software.

16. **Generic**

Manufacturer Authorization: Wherever Authorised Distributors/service providers are submitting the bid, Authorisation Form /Certificate with OEM/Original Service Provider details such as name, designation, address, e-mail Id and Phone No. required to be furnished along with the bid

17. **Generic**

Non return of Hard Disk: As per Buyer organization’s Security Policy,Faulty Hard Disk of Servers/Desktop Computers/ Laptops etc. will not be returned back to the OEM/supplier against warranty replacement.

18. **Scope of Supply**

Scope of supply (Bid price to include all cost components) : Supply Installation Testing and Commissioning of Goods

19. **Warranty**

Successful bidder will have to ensure that adequate number of dedicated technical service personals / engineers are designated / deployed for attending to the Service Request in a time bound manner and for ensuring Timely Servicing / rectification of defects during warranty period, as per Service level agreement indicated in the relevant clause of the bid.

20. **Generic**

Supplier shall ensure that the Invoice is raised in the name of Consignee with GSTIN of Consignee only.

21. **Warranty**

Timely Servicing / rectification of defects during warranty period: After having been notified of the defects / service requirement during warranty period, Seller has to complete the required Service / Rectification within 3 days time limit. If the Seller fails to complete service / rectification with defined time limit, a penalty of 0.5% of Unit Price of the product shall be charged as penalty for each week of delay from the seller. Seller can deposit the penalty with the Buyer directly else the Buyer shall have a right to recover all such penalty amount from the Performance Security (PBG).Cumulative Penalty cannot exceed more than 10% of the total contract value after which the Buyer shall have the right to get the service / rectification done from alternate sources at the risk and cost of the Seller besides forfeiture of PBG. Seller shall be liable to re-imberse the cost of such service / rectification to the Buyer.

22. **Certificates**

The bidder is required to upload, along with the bid, all relevant certificates such as BIS licence, type test certificate, approval certificates and other certificates as prescribed in the Product Specification given in the bid document.

23. **Generic**

1. The Seller shall not assign the Contract in whole or part without obtaining the prior written consent of buyer.
2. The Seller shall not sub-contract the Contract in whole or part to any entity without obtaining the prior

written consent of buyer.
3. The Seller shall, notwithstanding the consent and assignment/sub-contract, remain jointly and severally liable and responsible to buyer together with the assignee/ sub-contractor, for and in respect of the due performance of the Contract and the Sellers obligations there under.

24. **Generic**

Without prejudice to Buyer's right to price adjustment by way of discount or any other right or remedy available to Buyer, Buyer may terminate the Contract or any part thereof by a written notice to the Seller, if:
i) The Seller fails to comply with any material term of the Contract.
ii) The Seller informs Buyer of its inability to deliver the Material(s) or any part thereof within the stipulated Delivery Period or such inability otherwise becomes apparent.
iii) The Seller fails to deliver the Material(s) or any part thereof within the stipulated Delivery Period and/or to replace/rectify any rejected or defective Material(s) promptly.
iv) The Seller becomes bankrupt or goes into liquidation.
v) The Seller makes a general assignment for the benefit of creditors.
vi) A receiver is appointed for any substantial property owned by the Seller.
vii) The Seller has misrepresented to Buyer, acting on which misrepresentation Buyer has placed the Purchase Order on the Seller.

25. **Generic**

While generating invoice in GeM portal, the seller must upload scanned copy of GST invoice and the screenshot of GST portal confirming payment of GST.

अस्वीकरण/Disclaimer

The Additional Terms and Conditions (ATC) have been incorporated by the Buyer after approval of their Competent Authority. The Buyer ,is solely responsible for the impact of these clauses on the bidding process, its outcome, and consequences thereof including any restriction arising in the bidding process due to these ATCs and including the modification of technical specifications and / or terms and conditions governing the bid.All representations / grievances pertaining to the ATC clauses shall be raised with the buyer organization directly and not with GeM.If any of the clause(s) is/are incorporated by the Buyer regarding the following, the bid & resultant contract shall be treated as null & void. Further, GeM reserves the right, at its sole discretion, to cancel the bid forthwith, without issuance of any prior notice or intimation :-

1. Publishing Custom / BOQ bids for items for which regular GeM categories are available (unless such Custom / BOQ item is bunched with the major regular product Category Item).
2. Mandating procurement of / from specific Brand / Make / Model / Manufacturer / Dealer except in case of Single Bid / Proprietary Article Certificate (PAC) Buying.
3. Inclusion of disqualification criteria related to suspension of seller / service provider, where such suspension period has already expired.
4. Mandating submission of documents (other than EMD and signed Integrity Pact - which can be submitted within 5 days of bid opening) in physical form as a pre-requisite to qualify bidders.
5. Publishing bids on GeM for procurement of works.
6. Procurement of Goods by creating a Service bid on GeM & vice-versa.
7. Seeking sample with bid or approval of samples during bid evaluation process. However, trial / sample, as the case may be, shall be permitted in cases where trial / sample are allowed as per approved and published procurement policy of the Buyers' controlling Ministry / Department / State / Public Sector Enterprises Headquarters. If there is any violation of trial / sample clause with regard to approved policy of the Buyers' Ministry / Department / State / Public Sector Enterprises Headquarters, then this is to be determined and redressed by the concerned Buyer Organisation only.
8. Seeking experience from specific organization / department / institute only or from foreign / export experience.
9. Creating bid for items from incorrect categories.
10. Reference of conditions published on any external site or reference to external documents/clauses.
11. Asking for any Tender fee / Bid Participation fee, as the case may be.
12. Buyer added ATC Clauses which are in contravention of clauses defined in bid detail section, including

specifications, EMD Detail, ePBG Detail and MII and MSE Purchase Preference sections of the bid, unless otherwise allowed by the applicable GeM GTC.

13. Any ATC clause in contravention with GeM GTC Clause 4 (xiii) (h) will be invalid. In case of multiple L1 bidders against a service bid, the buyer shall place the Contract by selection of a bidder amongst the L-1 bidders through a Random Algorithm executed by GeM system.
14. In a category based bid, adding additional items, through buyer added, additional scope of work/ additional terms and conditions/or any other document. If buyer needs more items along with the main item, the same must be added through bunching category based items or by bunching custom catalogues or bunching a BoQ with the main category based item, the same must not be done through ATC or Scope of Work.

Further, if any seller has any objection/grievance against these additional clauses or otherwise on any aspect of this bid, they can raise their representation against the same by using the Representation window provided in the bid details field in Seller dashboard after logging in as a seller. Buyer is duty bound to reply to all such representations and would not be allowed to open bids if he fails to reply to such representations.

All GeM Sellers/Service Providers shall ensure full compliance with all applicable labour laws, including the provisions, rules, schemes and guidelines under the four Labour Codes i.e. the Code on Wages, 2019; the Industrial Relations Code, 2020; the Occupational Safety, Health and Working Conditions Code, 2020; and the Code on Social Security, 2020 as and when notified and brought into force by the Government of India.

For all provisions of the Labour Codes that are pending operationalisation through rules, schemes or notifications, the corresponding provisions of the pre-existing labour enactments (such as The Minimum Wages Act, 1948, The Payment of Wages Act, 1936, The Payment of Bonus Act, 1965, The Equal Remuneration Act, 1976, The Payment of Gratuity Act, 1972, etc. and relevant State Rules) shall continue to remain applicable.

The Seller/ Service Providers shall, therefore, be responsible for ensuring compliance under:

- **All notified and enforceable provisions of the new Labour Codes as mentioned hereinabove; and**
- **All operative provisions of the erstwhile Labour Laws until their complete substitution.**

All obligations relating to wages, social security, safety, working conditions, industrial relations etc. and any other statutory requirements shall be strictly met by the Seller/ Service Provider. Any non-compliance shall constitute a breach of the contract and shall entitle the Buyer to take appropriate action in accordance with the contract and applicable law.

This Bid is governed by the General Terms and Conditions, conditions stipulated in Bid and Service Level Agreement specific to the Service, as the case may be, as provided in the Marketplace.

However, in case of Service, if any condition specified in General Terms and Conditions is contradicted by the conditions stipulated in Service Level Agreement specific to said Service, then it will over-ride the conditions in the General Terms and Conditions.

यह बिड सामान्य शर्तों के अंतर्गत भी शासित है /This Bid is also governed by the General Terms and Conditions

जेम की सामान्य शर्तों के खंड 26 के संदर्भ में भारत के साथ भूमि सीमा साझा करने वाले देश के बिडर से खरीद पर प्रतिबंध के संबंध में भारत के साथ भूमि सीमा साझा करने वाले देश का कोई भी बिडर इस निविदा में बिड देने के लिए तभी पात्र होगा जब वह बिड देने वाला सक्षम प्राधिकारी के पास पंजीकृत हो।बिड में भाग लेते समय बिडर को इसका अनुपालन करना होगा और कोई भी गलत घोषणा किए जाने व इसका अनुपालन न करने पर अनुबंध को तत्काल समाप्त करने और कानून के अनुसार आगे की कानूनी कार्रवाई का आधार होगा।/In terms of GeM GTC clause 26 regarding Restrictions on procurement from a bidder of a country which shares a land border with India, any bidder from a country which shares a land border with India will be eligible to bid in this tender only if the bidder is registered with the Competent Authority. While participating in bid, Bidder has to undertake compliance of this and any false declaration and non-compliance of this would be a ground for immediate termination of the contract and further legal action in accordance with the laws.

---धन्यवाद/Thank You---

TENDER NO: NAL/PUR/ACD/180/26 **Date: 13-Nov-2026**

TENDER DOCUMENT

FOR

FABRICATION AND SUPPLY OF RUDDER HORN, END RIBS AND REAR SPAR TOOLS, ETC.

COUNCIL OF SCIENTIFIC AND INDUSTRIAL RESEARCH NATIONAL
AEROSPACE LABORATORIES
PB NO.1779, HAL AIRPORT ROAD, BENGALURU - 560 017
KARNATAKA, REPUBLIC OF INDIA

CSIR - NATIONAL AEROSPACE LABORATORIES
HAL AIRPORT ROAD, KODIHALLI, BENGALURU-560 017
Tel No.: 00 91 80 25086040 / 6041, Email: purchasek.nal@csir.res.in , Website: www.nal.res.in

Notice Inviting e-Tender

CSIR - National Aerospace Laboratories (NAL), Bengaluru, India is one of the premier laboratories under the aegis of Council of Scientific & Industrial Research, an autonomous body under the Department of Scientific and Industrial Research, Ministry of Science & Technology, Government of India, New Delhi. CSIR-NAL is a Science and Knowledge based Research, Development and Consulting Organisation. It is internationally known for its excellence in Scientific Research in Aerospace Engineering.

The Director, CSIR-NAL invites bids from the Manufacturers, their distributors and Indian Agent of Foreign Principals, if any, for the procurement of the following Goods/Services for its day-to-day research. The technical specifications, allied requirements and scope of supply are given in Chapter - 4 appended herewith.

Sl. No.	Tender No.	Brief Description of the material(s)	Quantity	Type of the Bid	Mode of Procurement
1	**NAL/PUR/ACD/180/26**	Fabrication and Supply of Rudder Horn, End Ribs and Rear Spar Tools, etc.	Details as per Chapter- 4	**Single Stage Two Bid**	Open Tender (GEM)

1. E-Bids are invited through the electronic tendering process and the Tender Document can be downloaded from the Government eMarketplace (GeM) Portal i.e., https://www.gem.gov.in. The submission of e-Bids will be only through the GeM portal https://www.gem.gov.in. Bids will not be accepted in any other form.

2. Interested Bidders' may obtain further information from the office of the:
   Sr. Controller of Stores & Purchase
   Purchase Division
   CSIR - National Aerospace Laboratories
   HAL Airport Road, Kodihalli,
   Bengaluru – 560 017, Karnataka-India
   Tel #: 080 2508 6040 / 6041, Email : purchasek.nal@csir.res.in

3. The prospective bidders' should adhere to deadlines specified in Tender Details Screen corresponding to this Tender on GeM portal https://www.gem.gov.in..

4. The Interested bidders' should upload Non-Disclosure Agreement (NDA), on GeM portal https://www.gem.gov.in. as scheduled below before attending the Pre-bid meeting and kindly note that it is mandatory to submit the NDA to participate in the Pre-bid meeting and only those bidders' can submit the tenders and the other bids will be rejected, if any. The NDA should be executed on company's letter head and signed by the bidders' on both sides of each page.

Successful bidder should submit NDA duly registered as per Stamp Act of India before placement of the Purchase Order.

	Date	Time in hours (IST)
Submission of NDA **[on or before]**	**-- Not Applicable--**	
Approval of NDA		

5. (a) A Pre-Bid Conference (PBC) will be held as mentioned below (as the case may be):

	Date	Time in hours (IST)	Venue
Pre-Bid Conference	**-- Not Applicable--**		

Bidders' desirous of attending Pre-bid meeting are required to provide the following details: -

1. Bidders Name & address
2. Name, designation & mobile number of the representative(s) attending the meeting.
3. E-mail ID to which the meeting invitation to be sent.
4. Pre-bid queries, if any.

The above information should be sent by e-mail to purchasek.nal@csir.res.in **on or before…**

(b) No Queries, suggestions or representation made after the PBC will be entertained. Changes made to the bidding document subsequent to the PBC shall be treated as amendment to the bidding document and the same is hosted in the GeM Portal and the Website of NAL.

(c) The Prospective bidders' are requested to take cognizance of the amendment(s) made, if any before formulating and uploading their bids.

6. The Bid prepared by the Bidder shall include the following:

Bid Security Declaration Form (BS)/Earnest Money Deposit (EMD)	
a)	The amount of Bid Security/EMD shall be: **NIL**
	The Bid Security/Earnest Money Deposit shall be deposited through Bank Guarantee/Demand Draft drawn in favour of "The Director, National Aerospace Laboratories, Bengaluru". The original Bid Security/EMD must be delivered to the address mentioned in Sl. No.2, above or before bid submission date and time as mentioned in "Date Sheet", failing which the bid shall be summarily rejected. For further details, refer Clause No.1.16 of Tender document
OR	
b)	In case if the Bid Security/EMD is NIL (or) Bidder is claiming exemption as per the provisions specified in the tender document, the bidder has to submit "Bid Security Declaration", as per the format specified in Chapter - 8, Annexure-B.
	The Bid Security Declaration in the name of "The Director, CSIR-National Aerospace Laboratories, Bengaluru", should be part of the Technical Bid, without which the bid is liable to for rejection.
c)	For further details on the above, refer tender document.
d)	Forms as specified in Chapter – 8

7. The Schedule for Submission of e-Bids and Opening of e-Bids is as follows:

Date & Time of Submission of e-Bid		Date and Time of Opening of e-Bid	
Date	Time (IST)	Date	Time (IST)
07-Dec-2026	**11:00 Hrs**	**08-Dec-2026**	**11:00 Hrs**

8. The Government of India's Public Procurement Policies are binding on CSIR-NAL, as the case may be. Therefore, the Bidders' are requested to refer to the guidelines as and when issued regarding the Government of India Procurement Policies for "Make in India", and Ministry of Micro, Small & Medium Enterprises (MSME), issued by the Ministry of Commerce and Industry, Department of Industrial Policy and Promotion (DPIIT) and Ministry of Finance. The onus for ensuring compliance to the provisions of the policy notifications and keeping in view the requirements under current tender document entirely rests with the Bidder.

Though the provisions pertaining to Government's public procurement purchase preference policy are briefly stated in the tender document under relevant clauses. Any bidder seeking exemptions/benefits/preferences under MSMEs/Start Up India/Make in India/DPIIT, Ministry of Commerce and Industry policy or any other policy/scheme of the Government of India, which is currently in force must declare at the time of bidding regarding their bidding status and the benefit/preference sought under the relevant policy of the Government and enclose all related documents/certificates etc., for claiming such benefits. The bidder must also clearly highlight the provisions of the policy with respect to the benefit/preference being sought by it for which it meets the eligibility conditions. Any exemption of DPIIT order is at the discretion of the Competent Authority of CSIR.

IF THE BIDDER FAILS TO DECLARE ITS STATUS AND/OR FAILS TO CLAIM THE POLCIY BENEFIT/PREFERENCE/ EXEMPTION ETC., AND/OR FAILS TO SUBMIT NECESSARY DOCUMENTS/CERTIFICATES IN SUPPORT OF ITS CLAIM AT THE TIME OF BIDDING, ITS CLAIM SHALL NOT BE ENTERTAINED AT A LATER STAGE IN THE BIDDING PROCESS AND NO OPPORTUNITY SHALL BE PROVIDED TO IT TO SUBMIT ANY DOCUMENT/CERTIFICATE IN SUPPORT OF ITS CLAIM AS IT VIOLATES THE TENDERING PROCESS.

9. (a) In case of agents quoting in offshore procurements, on behalf of their principal manufacturers, one agent cannot represent two manufacturers or quote on their behalf in a particular tender enquiry. One manufacturer can authorise only one agent/dealer. There can be only one bid from the following:

i)	The Principal manufacturer directly or through one Indian agent on his behalf; and
ii)	Indian/foreign agent on behalf of only one principal.

(b) Foreign Bidders' must disclose the name and address of their agent and representative in India and Indian bidder must disclose their foreign principal or associates.

(c) If bidder is an Indian Agent of Foreign Principal, the following instruction shall be complied and as amended from time to time as on the date of issue of tender:

i)	Bidder must necessarily comply with conditions of "Make in India", Order No. F-45021/2/2017-PP (BE-II), dated 16-Sep-2020, of Ministry of Commerce and Industry, Government of India, as amended from time to time on the date of issue of tender.

ii)	The Bidder shall comply with restrictions under Rule 144 (xi), of the GFR 2017, related to restrictions on participation of Foreign Bidders' and their authorised Indian Agent/Dealer in terms of Order No.P-45021/112/2020-PP (BE-II) (E-43780), dated 24-Aug-2020, of the Ministry of Commerce and Industry, Department for Promotion of Industry and Internal Trade, as amended from time to time as on the date of issue of order.

10. The bids failing to comply the following clauses will be summarily rejected.

    (a) The bidders' proposing to supply finished product directly/indirectly from Bidders of countries sharing the land border with India should submit a copy of their registration with the Ministry of Home Affairs and Ministry of External Affairs.

    (b) In case if the product(s) supplied is/are not from Bidders' of countries sharing land border with India, such Bidders' should enclose a declaration

    (c) The debarment of a Bidder in this tender, if any, is reciprocal of that Principal's country, if it is an import.

11. The Director, CSIR-National Aerospace Laboratories (NAL), Bengaluru, India, reserves the right to accept or reject any bid(s) or accept all tenders either in part or in full or to split the order, or to annul the bidding process without assigning any reasons there for.

SD/-
Sr. Controller of Stores & Purchase

INDEX

Chapter	Content
1	Instructions to Bidders
2	General and Special Conditions of Contract
3	Schedule of Requirement
4	Specifications and Allied Technical Details
5	Price Schedule Forms
6	Qualification Requirements
7	Contract Form
8	Other Forms
9	Terms & Conditions
10	Confidentiality and Non-Disclosure Agreement

CHAPTER – 1

INSTRUCTIONS TO BIDDERS - Table of Contents

Clause No.	Contents
A. Introduction	
1.1	Eligible Bidders
1.2	Cost of Bidding
1.3	Code of Integrity
B. The Bidding Documents	
1.4	Cost of tender documents
1.5	Content of tender documents
1.6	Clarification of tender documents
1.7	Amendment of tender documents
C. Preparation of Bids	
1.8	Language of Bid
1.9	Purchase Preference Policies
1.10	Documents Comprising the Bid
1.11	Bid form and price schedule
1.12	Bid Prices
1.13	Bid Currencies
1.14	Documents Establishing Bidder's Eligibility and Qualifications
1.15	Documents Establishing Goods' Eligibility And Conformity to Bidding Documents
1.16	Bid Security
1.17	Period of Validity of Bids
1.18	Format and Signing of Bid
D. Submission and Sealing Bids	
1.19	Submission, Sealing and Marking of Bids
1.20	Deadline for Submission of Bids
1.21	Late Bids
1.22	Withdrawal, substitution and Modification of Bids
E. Opening and Evaluation of Bids	
1.23	Opening of Bids by the Purchaser
1.24	Confidentiality
1.25	Clarification of Bids
1.26	Preliminary Examination
1.27	Bidders right to question rejection
1.28	Responsiveness of Bids
1.29	Non-Conformity, Error and Omission
1.30	Examination of Terms & Conditions, Technical Evaluation
1.31	Conversion to Single Currency
1.32	Evaluation and Comparison of bids
1.33	Contacting the Purchaser
1.34	Post qualification
F. Award of Contract	
1.35	Negotiations
1.36	Award Criteria
1.37	Purchaser's right to vary Quantities at Time of Award
1.38	Option Clause
1.39	Purchaser's right to accept any Bid and to reject any or all Bids
1.40	Notification of Award
1.41	Signing of Contract
1.42	Order Acceptance
1.43	Performance Security
1.44	Integrity Pact
1.45	Assistance to Bidders

A Introduction

Instructions to bidder are broad guidelines to be followed while formulating the bid and its submission to the Purchaser. It also describes the methodology for opening and evaluation of the bids and consequent award of contract. Instructions applicable for Import of Goods (Global Tender Enquiry) need not be applicable for Domestic Tender Enquiry and those may be ignored.

1.1. Eligible Bidders

1.1.1 This Invitation for Bids is open to all the suppliers'. However, only Class-I and Class- II local suppliers are eligible to participate in the Domestic Tender. Any bidder from foreign country can participate in Global Tender Enquiry subject to Clause 1.1.3 below. Mode of Procurement is whether Domestic Tender or Global Tender Enquiry is specified in the Notice Inviting Tenders (NIT).

1.1.2 Bidders' should not be associated, or have been associated in the past, directly or indirectly, with a firm or any of its affiliates which have been engaged by the Purchaser to provide consulting services for the preparation of the design, specifications, and other documents to be used for the procurement of the goods to be purchased under this Invitation of Bids.

1.1.3 Any bidder from a country which shares a land border with India will be eligible to bid in any procurement whether of goods or services, only if the bidder is registered with Competent Authority as specified in the Ministry of Finance (GoI) Order No.6/18/2019 – PPD, dated 23rd July 2020, and as amended from time to time.

1.1.4. Bidders' who fulfil the Eligibility Criteria mentioned in Chapter 6 will be considered for technical evaluation of bids.

1.1.5 The bidders who have been temporarily suspended or removed from the list of registered suppliers by the purchaser or banned from the Ministry/country wide procurement will not be eligible to participate in the bidding process.

1.2 Cost of Bidding

1.2.1 The Bidder shall bear all the costs associated with the preparation and submission of its bid, and the Purchaser will in no case be responsible or liable for these costs, regardless of the conduct or outcome of the bidding process.

1.3 Code of Integrity

1.3.1 The bidders should sign a declaration on abiding by the Code of Integrity for Public Procurement and submit the same in respective form as per Chapter - 8: Annexure-H, along with bid documents. In case of any transgression of this code, the bidder is not only liable to be removed from the list of registered suppliers, but it would be liable for other punitive actions such as cancellation of contracts, banning and blacklisting or action by Competition Commission of India, and so on.

1.3.2 Code of integrity for Public Procurement:

The Purchaser requires that the bidders/consultants should observe the highest standard of ethics and should not indulge in the following prohibited practices, either directly or indirectly, at any stage during the procurement process or during execution of resultant contracts:

i)	Corrupt Practice:	making offers, solicitation or acceptance of bribe, rewards or gifts or any material benefit, in exchange for an unfair advantage in the procurement process or to otherwise influence the procurement process or contract execution;
ii)	Fraudulent Practice:	any omission or misrepresentation of facts that may mislead or attempt to mislead so that financial or other benefits may be obtained or an obligation avoided. This includes making false declaration or providing false information for participation in a tender process or to secure a contract or in execution of the contract;
iii)	Anti-competitive Practice:	any collusion, bid rigging or anti-competitive arrangement, or any other practice coming under the purview of the Competition Act, 2002, between two or more bidders, with or without the knowledge of the purchaser, that may impair the transparency, fairness and the progress of the procurement process or to establish bid prices at artificial, non-competitive levels;
iv)	Coercive Practice:	harming or threatening to harm, person(s) or their property to influence their participation in the procurement process or affect the execution of a contract;
v)	Conflict of interest:	participation by a bidding firm or any of its affiliates that are either involved in the consultancy contract to which this procurement is linked; or if they are part of more than one bid in the procurement; or if the bidding firm or their personnel have relationships or financial or business transactions with any official of purchaser who are directly or indirectly related to tender or execution process of contract; or improper use of information obtained by the (prospective) bidder from the purchaser with an intent to gain unfair advantage in the procurement process or for personal gain; and
vi)	Obstructive Practice:	materially impede the purchaser's investigation into allegations of one or more of the above mentioned prohibited practices either by deliberately destroying, falsifying, altering; or by concealing of evidence material to the investigation; or by making false statements to investigators and/or by threatening, harassing or intimidating any party to prevent it from disclosing its knowledge of matters relevant to the investigation or from pursuing the investigation; or by impeding the purchase entity's rights of audit or access to information;
vii)	Collusive Practice	means a scheme or arrangement between two or more bidders, with or without the knowledge of the purchaser, designed to establish bid prices at artificial, non-competitive levels.

1.3.2 The Purchaser will reject a proposal for award, if it determines that the Bidder recommended for award has, directly or through an agent, engaged in corrupt, fraudulent, collusive or coercive practices in competing for the Contract in question.

1.3.3 Obligations for Proactive disclosures

i)	The Purchaser as well as bidders'/consultants', are obliged under Code of Integrity for Public Procurement to *sue-moto* proactively declare any conflicts of interest (coming under the definition mentioned above - pre-existing or as and as soon as these arise at any stage) in any procurement process or execution of contract. Failure to do so would amount to violation of this code of integrity; and

ii)	The bidder must declare, whether asked or not in a bid document, any previous transgressions of such a code of integrity with any entity in any country during the last three years or of being debarred by any other Procuring Entity. Failure to do so would amount to violation of this code of integrity;
iii)	To encourage voluntary disclosures, such declarations would not mean automatic disqualification for the bidder making such declarations. The declared conflict of interest would be evaluated and mitigation steps, if possible, taken by the purchaser.

1.3.4 Punitive Provisions

Without prejudice to and in addition to the rights of the Purchaser to other penal provisions as per the bid documents or contract, if the Purchaser comes to a conclusion that a prospective bidder, directly or through an agent, has violated this code of integrity in competing for the contract or in executing a contract, the purchaser may take appropriate measures including one or more of the following:

i)	If bids are under consideration in any procurement:	
	a)	Forfeiture or encashment of bid security;
	b)	Calling off of any pre-contract negotiations; and
	c)	Rejection and exclusion of the bidder from the procurement process.
ii)	If a contract has already been awarded	
	a)	Cancellation of the relevant contract and recovery of compensation for loss incurred by the purchaser;
	b)	Forfeiture or encashment of any other security or bond relating to the procurement;
	c)	Recovery of payments including advance payments, if any, made by the purchaser along with interest thereon at the prevailing rate.
iii)	Provisions in addition to above:	
	a)	Removal from the list of registered suppliers and banning/debarment of the bidder from participation in future procurements of the purchaser for a period not less than one year;
	b)	In case of anti-competitive practices, information for further processing may be filed under the signature of the Joint Secretary level officer, with the Competition Commission of India;
	c)	Initiation of suitable disciplinary or criminal proceedings against any individual or staff found responsible.

B. **The Bidding Documents**

1.4 Cost of Tender Documents

1.4.1 The bidding documents can be downloaded at ***free of cost*** from the website of GeM Portal https://www.gem.gov.in or www.nal.res.in.

1.5 Content of Tender Documents

1.5.1 The Goods/Services required, bidding procedures and contract terms are prescribed in the bidding documents which should be read in conjunction with this procurement specification. The bidding documents, apart from the Notice Inviting Tender have been divided into 8 Chapters as under:

Chapter No.	Name of the Chapter	
1	Instructions to Bidder (ITB)	
2	General Conditions of Contract (GCC) and Special Condition of Contract (SCC)	
3	Schedule of Requirements	
4	Specifications and Allied Technical Details	
5	Price Schedule Forms	
6	Qualification requirements	
7	Contract Form	
8	Other Standard Forms comprising	
	(i)	Bid Security / Earnest Money Deposit
	(ii)	Bid Securing declaration
	(iii)	Bidder Information Form
	(iv)	Bid form
	(v)	Manufacturer's Authorization Form (MAF);
	(vi)	Performance Statement form
	(vii)	Service Support details;
	(viii)	Format for declaration by the bidder for code of integrity and conflict of interest
	(ix)	Certificate of Local Content
	(x)	Certificate of Price Break-up of Local Content
	(xi)	Integrity pact
	(xii)	Self-Certification
	(xiii)	Deviation Statement Form
	(xiv)	Performance Security Form
	(xv)	Acceptance Certificate Form

1.5.2 The Bidder is expected to examine all instructions, forms, terms, and specifications in the bidding documents. Failure to furnish all information required by the bidding documents or submission of a bid not substantially responsive to the bidding documents in every respect will be at the Bidder's risk and may result in rejection of its bid.

1.6 Clarification of tender documents

Pre-Bid Conference (PBC)

The objective of PBC is to provide a platform for clarifying issues and clearing doubt, if any, about the specification and other allied technical/commercial details of the bid document. This is also an opportunity to question the bidding conditions and the bidding process. You can bring to our notice any restrictive terms, condition, inconsistent/conflicting, clauses terms/information or item specification in the tender document so that required changes can be made, if any.

1.6.1 In case when there is NO PRE-BID CONFERENCE

A prospective Bidder requiring any clarification of the bidding Documents shall contact the Purchaser in writing through the GeM website https://www.gem.gov.in OR at the Purchaser's address specified in the Special Conditions of Contract (SCC). The Purchaser will respond in writing through the GeM Portal OR through e-mail to any request for clarification, provided that such request is received not later than ten (10) days prior to the due date for submission of bids. Should the Purchaser deem it necessary to amend the Bidding Documents as a result of a clarification, it shall do so following the procedure under ITB Clause 1.7 relating to amendment of bidding documents and ITB Clause 1.20 relating to Due date for Submission of

Bids. The amendments issued would be hosted on the GeM website https://www.gem.gov.in of the purchaser for the benefit of the prospective bidders who are expected to take cognizance of the same before formulating and submitting their bids.

1.6.2. In case when there is PRE-BID CONFERENCE

a) A prospective Bidder requiring any clarification of the Biding Documents shall contact the Purchaser in writing through GeM website https://www.gem.gov.in OR at the Purchaser's address specified in the Special Conditions of Contract (SCC), latest by the date specified in the Invitation for Bids / NIT which would be deliberated as per ITB Clause 1.6.2 (b) of Instructions to the Bidders. No request for clarification or query shall be normally entertained after the Pre-Bid Conference. Should the Purchaser deem it necessary to amend the Bidding Documents as a result of a clarification, it shall do so following the procedure under ITB Clause1.7 relating to amendment of Bidding Documents and ITB Clause 1.20 relating to Due Date for Submission of Bids. The clarifications and amendments issued would also be hosted on the GeM website https://www.gem.gov.in of the Purchaser for the benefit of the other prospective bidders.

b) A Pre-Bid Conference shall be held at venue and schedule specified in Tender Detail Screen. All prospective bidders are requested to kindly attend the Pre-Bid Conference. In order to facilitate CSIR-NAL for proper conduct of the Pre-Bid Conference, all prospective bidders are requested to kindly submit their queries (with envelope bearing Tender No. and Date on top and marked "Queries for Pre- Bid Conference") so as to reach CSIR-NAL as indicated in Invitation to Bid. Queries may be sent by email to CSIR-NAL shall answer the queries during the pre-bid conference, which would become a part of the proceedings of the Pre-Bid Conference. These proceedings will become a part of clarifications / amendments to the bidding documents and would become binding on all the prospective bidders. These proceedings would also be hosted on GeM website https://www.gem.gov.in for the benefit of all the prospective bidders. Before formulating and submitting their bids, all prospective bidders are advised to surf through the GeM website https://www.gem.gov.in after the Pre-Bid Conference, in order to enable them take cognizance of the changes made in the Tender document.

A Pre-Bid Conference shall be held as indicated in invitation to bid, if any. All prospective bidders are requested to attend the Pre-Bid Conference. In order to facilitate the purchaser, the proper conduct of the Pre-Bid Conference, all prospective Bidder requiring any clarification of the Bidding Documents shall contact the Purchaser in writing at the Purchaser's address specified in the Special Conditions of Contract (SCC), NIT, latest by the date specified in the critical date sheet. No request for clarification or query shall normally be entertained after the deadline/pre-bid conference, if any. The purchaser shall answer the queries during the pre-bid conference, which would become part of the proceedings of the Pre- bid Conference. The proceeding of the Pre-Bid Conference will be hosted on the website of the purchaser/ GeM Portal. Before formulating and submitting their bids, all prospective bidders are advised to surf through the purchaser's website/ GeM Portal after the Pre-bid Conference, in order to enable them take cognizance of the revised tender terms and conditions.

1.6.3 The queries, clarifications and amendments issued would also be hosted on the website of the GeM Portal/Purchaser for the benefit of the other prospective bidders and also shall be sent to all bidders who have purchased the tender documents.

1.7 Amendment of Tender Documents

1.7.1 At any time prior to the deadline for submission of bids, the Purchaser may, for any reason, whether at its own initiative or in response to a clarification requested by a prospective bidder, modify the tender documents by amendment. The same would also be hosted in the website of the GeM Portal/Purchaser and all prospective bidders are expected to surf the website before submitting their bids to take cognizance of the amendments.

1.7.2 All prospective bidders who have down loaded the Tender Document should surf website of GeM Portal/Purchaser from time to time to know about the changes / modifications in the Tender Document. The changes / modifications would also be hosted on the website of GeM Portal/Purchaser. All prospective bidders are expected to surf the website of GeM Portal/Purchaser before formulating and submitting their bids to take cognizance of the amendments.

1.7.3 In order to allow prospective bidders' reasonable time in which to take the amendment into account in preparing their bids, the Purchaser, at its discretion, may extend the deadline for the submission of bids and host the changes in the GeM Portal and Purchaser website.

C. PREPARATION OF BIDS

1.8. Language of Bid

1.8.1 The bid prepared by the Bidder, as well as all correspondence and documents relating to the bid, exchanged by the Bidder and the Purchaser shall be written in English language only, especially when the details are technical in nature. However, if GoI makes it mandatory under Raj Bhasha Abhiyan, the views of Rajbhasha unit of CSIR may be sought.

1.8.2 The Bidder shall bear all the costs of translation, if any, to the English language and bear all risks of the accuracy of such translation, for documents provided by the Bidder.

1.9 Purchase Preference Policies

1.9.1 The purchaser intends to give product reservation/purchase preference/price preference in line with current Government of India procurement policies to help inclusive national economic growth by providing long term support to MSMEs and disadvantaged sections of the society and to address environmental concerns along with preferential market access in government procurements.

1.9.2 For the above purpose, local supplier means a supplier or service provider whose product or service offered for procurement meets the minimum local content as prescribed in DIPP Order No. P-45021/2/2017-PP (BE-II), dated 28th May, 2018 or by the competent Ministries/Departments in pursuance of this order, as amended from time and time. And local content means the amount of value added in India which shall, unless otherwise prescribed by the Nodal Ministry, be the total value of the items procured (excluding net domestic indirect taxes) minus the value of imported content in the items (including all customs duties) as a proportion of the total value, in per cent.

1.10 Documents comprising the E-bid

1.10.1 The E-bid shall comprise of the documents as per the requirement of the tender document. The documents specified in Chapter - 8, Annexure-M, Deviation Statement Form (Part-II) should be scanned and uploaded in PDF format in proper sequence. The scanned documents uploaded as part of the bid should be scanned in high resolution for better readability.

The bid prepared by the Bidder shall include documents as under:

Sl. No.	Required documents
	A. TECHNICAL BID
(a)	Bid Security/Earnest Money Deposit (as specified in the Invitation to Bids);
(b)	Bid Securing Declaration
(c)	Bidder Information Form
(d)	Bid Form
(e)	Manufacturer's Authorisation Form along with a certified copy of the Agency Agreement between the bidders and the Indian Agent;

(f)	Performance Statement Form;
(g)	Service support details form;
(h)	Declaration abiding by the Code of Integrity and no conflict of interest for public procurement;
(i)	Certificate of Local Content
	Self-certification that the item(s) offered meets the minimum local content giving details of the location(s) at which the local value addition is made in case the bidder wishes to avail the benefits under Make in India policy, if applicable.
	In cases of procurement for a value in excess of Rs.10 crores, the local supplier should provide a certificate from the statutory auditor or cost auditor of the company (in the case of companies) or from a practicing cost accountant or practicing chartered accountant (in respect of suppliers other than companies) giving the percentage of local content to avail the benefits under Make in India policy, if applicable.
(j)	Certificate of Price Break-up of Local Content
(k)	Integrity Pact, if applicable;
(l)	Self-Certificate: A documentary evidence establishing that the bidder is eligible to bid and is qualified to perform the contract if its bid is accepted;
(m)	Documents establishing goods eligibility and conformity to bidding documents; indicating the Indian Customs Tariff (ICT) number and Harmonised System of Nomenclature (HSN) number.
(n)	Documentary evidence about the status of the bidder i.e., whether MSME or not, owned by SC/ST or not and whether the MSME is owned by a women entrepreneur or not.
(o)	Deviation Statement Form;
(p)	Schedule of requirements.
(q)	Unpriced bid with Technical Specifications & Scope of Supply/services and Terms & Conditions.
B. PRICE BID	
(i)	Bid form;
(ii)	Applicable Price Schedule Form;
(iii)	Certificate of Price Break-up of Local Content;
(iv)	Terms & Conditions

1.10.2 Documents comprising Single Bid

All the documents (as applicable) specified in Chapter-8: Annexure-M (Part-II) should be submitted in Single E-Bid along with BOQ - Price bid.

1.10.3 Documents comprising Two Bid (Technical Bid & Price Bid)

Technical bid should comprise documents (as applicable) specified in Chapter- 8:Annexure-M (Part-II). Price Bid should comprise of BOQ & Annexure-J (if applicable).

1.11. Bid form and price schedule

1.11.1 The bidder shall complete the Bid Form and the appropriate price schedule form furnished in the bidding documents. These forms must be completed without any alterations and no substitutes shall be accepted. All blank spaces shall be filled in with the required information. The Bid Form and the appropriate Price Schedule Form shall be submitted in accordance with ITB Clause 1.18.3 of the bidding documents.

1.12. Bid Prices

1.12.1 The Bidder shall fill up the Bill of Quantity (BoQ) i.e., the Price Bid. The BoQ should be filled up carefully as it will be used for evaluation of lowest quotation. The contract will be awarded to the lowest quoting firm subject to fulfillment of other terms and conditions of tender and also the Price Preference Policy of the Government of India, as amended from time and time and as specified in the tender document.

1.12.2 Prices indicated on the price schedule form shall be entered separately in the following manner:

(a)	For the goods manufactured within India	
	(i)	The price of the goods quoted Ex-works including taxes already paid.
	(ii)	GST and other taxes, if any which will be payable on the goods if the contract is awarded
	(iii)	The charges for inland transportation, insurance and other local services required for delivering the goods at the desired destination as specified in the price schedule form.
	(iv)	Wherever applicable, the cost towards the installation, commissioning, spares, extended warranty, AMC/CAMC, site preparation and training including any incidental services, if any.
(b)	For goods manufactured abroad	
	(i)	The price of the goods, quoted on FCA (named place of delivery abroad) or Free on Board (FOB) (named port of shipment), as specified in the price schedule form.
	(ii)	The charges for insurance and transportation of the goods to the port/place of destination both by Air/Sea.
	(iii)	The agency commission charges, if any.
	(iv)	Wherever applicable, the cost towards the installation, commissioning, spares, extended warranty, AMC/CAMC, site preparation and training including any incidental services, if any.

1.12.3 The terms Free on Board (FOB), Free Carrier (FCA), Cost Insurance and Freight (CIF), Carriage Insurance Paid (CIP) etc., shall be governed by the rules prescribed in the current edition of the Incoterms published by the International Chambers of Commerce, Paris.

1.12.4 Where there is no mention of packing, forwarding, freight, insurance charges, taxes etc., such offer(s) shall be considered as incomplete and the same will be rejected.

1.12.5 The price quoted shall remain fixed during the currency of the contract and shall not vary on any account

1.12.6 All lots and items must be listed in Unpriced Bid and priced separately as per BoQ/Price Schedule. If the Unpriced Bid shows item(s) listed but not priced in BoQ/Price Schedule, their prices shall be assumed to be included in the prices of other item(s). Lots or items not listed in the Price Schedule shall be assumed to be not included in the bid.

1.12.7 (a) In case of imports the freight and insurance will be paid by the Purchaser, as the consignments are to be shipped through the Purchaser nominated freight forwarder.

(b) Custom Duty is levied on all the imports meant for CSIR-NAL. Hence, the suppliers' are requested to quote only on FOB/FCA basis, and freight, insurance and customs duty should be quoted as applicable to Research & Development Institutions and the same shall be borne by the Purchaser.

1.12.8. In case of bids in Indian Rupees, the price criteria should be on Free Delivery to CSIR- NAL. The rates should be quoted by furnishing the basic price, GST etc., if any. Alongside, all government levies such as GST, shall be paid at actuals as applicable on the date of delivery.

1.12.9 (a) CSIR-NAL is a Public Funded Research Institute under Department of Scientific & Industrial Research, Ministry of Science & Technology, Government of India and concessional Custom duty at the rate of 5.50 (five point five zero) per cent is applicable for the goods purchased for research purpose vide Government of India Notification No.51/96-Customs, dated 23-July-1996, as amended from time to time.

(b) CSIR-NAL is a Public Funded Research Institute under Department of Scientific & Industrial Research, Government of India and concessional GST is not applicable for the goods purchased for research purpose. Hence, the GST will be applicable at the rate of 18 (eighteen) per cent for the goods and services supplied to CSIR Institutes.

1.12.10 Kindly, state clearly in your offer whether the duties and taxes are extra on the quoted prices, failing which it will be presumed that the prices are inclusive of taxes and duties and no claim will be entertained for any statutory levies at a later date.

1.12.11 Stipulations like "GST is presently not applicable but the same will be charged if it becomes leviable later on", is not acceptable unless in such cases it is clearly stated that GST will not be charged, if the same becomes applicable later on due to increase in turn over etc., If a bidder fails to comply with this requirement, his quoted price shall be loaded with the quantum of duty which is normally applicable on the item in question for the purpose of comparison with the prices of other tenderers.

1.12.12 a) All payments due under the contract shall be paid after deduction of statutory levies at source i.e., Tax Deduction at Source (TDS), Income Tax (IT), Tax Collected at Source (TCS) etc., wherever applicable. In this pursuit, GOI notification may be referred to before submitting quote on their own interest. Statutory deductions will be done accordingly at the time of payment.

b) If the supplier has not filed Income Tax returns for the current financial year, TDS/TCS is applicable as per the Income Tax Act.

c) Withholding Taxes are applicable on foreign payments but not limited to Royalty, Fees for Technical Services etc.,

1.13. Bid Currencies

1.13.1 Prices shall be quoted in Indian Rupees for offers received for supply within India and in freely convertible foreign currency in case of offers received for supply from foreign countries i.e., domestic tenderers are to quote and accept their payment in Indian currency; Indian agents of foreign suppliers will receive their agency commission in Indian currency; cost of imported goods & services rendered in India, which are directly imported against the contract, may be quoted in foreign currency/ies. Multicurrency BoQ shall have provision to quote prices in multiple currencies including Indian Rupees.

1.14. Documents Establishing Bidder's Eligibility and qualifications

1.14.1 The bidder shall furnish, as part of its bid documents establishing the bidders' eligibility to bid and its qualification (as specified in Chapter-6) to perform the contract, if its bid is accepted.

1.14.2 The documentary evidence of the bidder's qualification to perform the contract if the bid is accepted shall establish to the purchaser's satisfaction that;

(a)	The bidder meets the qualification criteria listed in bidding documents. if any.
(b)	Bidder who doesn't manufacture the goods it offers to supply shall submit Manufacturer's Authorisation Form (MAF), using the form specified in the bidding document to demonstrate that it has been duly authorised by the manufacturer of the goods to quote and/or supply the goods

(c)	In case a bidder not doing business within India, it shall furnish the certificate to the effect that, the bidder is or will be represented by an agent in India equipped and able to carry out the supply, maintenance, repair obligations etc., during the warranty and post warranty period or ensure a mechanism at place for carrying out the supply, maintenance, repair obligations etc., during the warranty and post-warranty period.

1.14.3 Conditional tenders/offers shall not be accepted. Alternate offers/makes/models will not be considered.

1.14.4 Printed conditions, if any, submitted along with your quotation shall not be binding on us.

1.14.5 Bids received by e-mail/fax is not accepted.

1.15 Documents Establishing Goods Eligibility and Conformity to Bidding Documents

1.15.1 To establish the goods eligibility, the documentary evidence of the goods and services eligibility shall consist of a statement on the Country of Origin of the goods and services offered which shall be confirmed by a certificate of origin at the time of shipment.

1.15.2 To establish the conformity of the goods and services to the specifications and schedule of requirements of the bidding document, the documentary evidence of conformity of the goods and services to the bidding documents may be in the form of literature, drawings and data, and shall consist of:

(a)	A detailed description of the essential technical and performance characteristics of the goods;
(b)	A list giving full particulars, including available sources and current prices, of spare parts, special tools, etc., necessary for the proper and continuing functioning of the goods during the warranty period following commencement of the use of the goods by the Purchaser in the Priced-bid; and
(c)	A item wise commentary on the Purchaser's Technical Specifications demonstrating substantial responsiveness of the goods and services to those specifications or a statement of deviations and exceptions to the provisions of the Technical Specifications.

1.15.3 For purposes of the commentary to be furnished pursuant to above, the Bidder shall note that standards for workmanship, material and equipment, designated by the Purchaser in its Technical Specifications are intended to be descriptive only and not restrictive. The Bidder may substitute these in its bid, provided that it demonstrates to the Purchaser's satisfaction that the substitutions ensure substantial equivalence to those designated in the Technical Specifications.

1.16. Bid Security (BS)/Earnest Money Deposit (EMD)

1.16.1 The Bidder shall furnish, as part of its bid, a Bid Security (BS)/Earnest Money Deposit (EMD) for an amount as specified in the Invitation for Bids in the form of Bank Guarantee/Demand Draft drawn on any Nationalised Bank in favour of the "Director, National Aerospace Laboratories, Bengaluru", as the case may be.

a) In the case of foreign bidder(s):

a)	The BS/EMD shall be submitted either by the principal or by the Indian agent.
b)	The bidder who submits the tender on behalf of their principals should produce documentary evidence in support of their authority to quote.
c)	The Bank Guarantee (BG) is insisted due to steep fluctuations in foreign exchange hence, the foreign DDs are not accepted towards BS/EMD.
d)	In case a bidder desires to submit a BG issued by a foreign bank, the same should be confirmed by a Nationalised bank in India.

b) In the case of Indigenous Bidder(s):-
The BS/EMD shall be submitted by the manufacturer or their specifically authorised dealer/bidder.

1.16.2 The E-bids submitted without BS/EMD will stand rejected. BS/EMD will not be accepted in the form of Cash/Cheque or any other form other than Demand Draft/Bank Guarantee as per format given in Chapter-8, as the case may be. Kindly note that No Interest is payable on BS/EMD.

1.16.3 The bid security is required to protect the Purchaser against the risk of Bidder's conduct, which would warrant the security's forfeiture.

1.16.4 The bid security shall be in Indian Rupees for offers received for supply within India and denominated in the currency of the bid or in any freely convertible foreign exchange in the case of offers received for supplies from foreign countries in equivalent Indian Rupees. The bid security shall be in one of the following forms at the bidders' option:

(a)	A Bank guarantee (BG) or stand-by Letter of Credit issued by a Nationalised Bank/Foreign Bank operating in India in the form provided in the bidding documents and valid for 45 (forty five) days beyond the validity of the Bid. In case a Bidder desires to submit a BG issued by a Foreign Bank, the same should be confirmed by a Nationalised Indian Bank [OR]
(b)	A Banker's cheque or Account Payee demand draft in favour of the purchaser issued by any Nationalized bank [OR]
(c)	A Fixed Deposit Receipt pledged in favour of the Director, CSIR-NAL, Bengaluru.

1.16.4 The bid security shall be payable promptly upon written demand by the purchaser in case the conditions listed in the ITB clause 1.16.11 are invoked.

1.16.5 The bid security should be submitted in its original form to the address mentioned below:-

THE SR. CONTROLLER OF STORES & PURCHASE
CSIR-NATIONAL AEROSPACE LABORATORIES,
PB NO.1779, HAL AIRPORT ROAD, KODIHALLI,
BENGALURU – 560017
KARNATAKA, REPUBLIC OF INDIA

Scanned Copy of Demand Draft/Bank Guarantee towards bid security should be uploaded along with the E-bid. The envelope enclosing EMD should be superscribed on an envelope with Tender Number and specifying as "EMD".

1.16.6 Bidders that are currently registered with the purchaser or registered as MSMEs will continue to remain registered during the tender validity period also and are exempted from payment of EMD. In case the tenderer falls in these categories, the bidder should furnish a certified copy of its valid registration details. Except for MSMEs, this exemption is valid for the trade group and monetary value of registration only. The MSMEs are provided tender document free of cost and are exempted from the payment of Bid Security provided the goods are produced and the services are rendered by them and not for any trading activities undertaken by them. Further, firms who are having Udyog Aadhar Memorandum are entitled to all benefits available for MSMEs under the Public Procurement Policies for MSMEs and can get registered with any of the following agencies:

(a)	District Industries Centre
(b)	Khadi and Village Industries Commission
(c)	Khadi and Village Industries Board
(d)	Coir Board
(e)	National Small Industries Corporation
(f)	Directorate of Handicraft and Handloom and
(g)	Any other body specified by the Ministry of MSME

(h)	Udyog Aadhaar Acknowledgement/UgyogAadhaar Memorandum issued by MoMSME.

1.16.7 The bid security of unsuccessful bidder will be discharged/returned as promptly as possible positively within a period of 30 (thirty) days after the expiration of the period of bid validity or placement of purchase order whichever is later, without any interest.

1.16.8 The successful Bidder's bid security will be discharged upon the Bidder furnishing the performance security, without any interest. Alternatively, the BS/EMD could also be adjusted against Performance Security, if it is paid through Demand Draft/Banker's Cheque.

1.16.9 Where any aggregator has been appointed by the Ministry of MSME, themselves quote on behalf of some MSME units, such offers will be considered as offer from MSME units and all such facilities would be extended to these aggregators also.

1.16.10 The receipt of Bid Security before time and date of submission of bid is mandatory requirement. The bid is liable to be rejected if the Bid Security is not received within the stipulated time.

1.16.11 The bid security may be forfeited:

(a)	If a Bidder withdraws or amends or modifies or impairs or derogates its bid during the period of bid validity specified by the Bidder on the Bid Form; or
(b)	In case of a successful Bidder, if the Bidder fails to furnish order acceptance within 14 (fourteen) days of the purchase order or fails to sign the contract and/or fails to furnish Performance Security within 21 (twenty one) days from the date of issue of the contract.

1.16.12 Whenever the bidder chooses to submit the Bid Security in the form of Bank Guarantee, the Bidder should advise the issuing bank to immediately send the unstamped duplicate copy Bank Guarantee by Registered Post with acknowledgement due directly to the Purchaser with a covering letter to compare with the original BG for its correctness.

1.16.13 Whenever the bidder who seeks exemption for EMD/BS or when EMD/BS specified in NIT is NIL, Bidder should submit Bid Securing Declaration as per the format specified in Chapter-8.

1.17. Period of Validity of Bids

1.17.1 Bids shall remain valid for a minimum period of 90 (ninety) days after the date of bid opening prescribed by the Purchaser. A bid valid for a shorter period shall be rejected by the Purchaser as non-responsive.

1.17.2 In exceptional circumstances, the Purchaser may solicit the Bidder's consent to an extension of the period of validity. The request and the responses thereto shall be made in writing by post, fax or e-mail. The bid security provided shall also be suitably extended failing which the bid would be summarily ignored. A Bidder may refuse the request without forfeiting its bid security. A Bidder granting the request will not be required nor permitted to modify its bid.

1.17.3 Bid evaluation will be based on the bid prices without taking into consideration the above corrections.

1.18. Format and Signing of Bid

1.18.1 The bids may be submitted as Single Bid or Two Bid as specified in the Invitation for Bids/NIT.

1.18.2 In case the bids are invited on Single Bid basis, the Bidder should submit E-bid comprising all the documents listed under ITB clause 1.10.1 relating to documents comprising the bid.

1.18.3 In case the bids are invited on Two Bid system, the Bidder shall submit E-bid in two separate parts. First part shall contain the Technical Bid comprising all the documents listed under clause relating to documents comprising the bid. The second part shall contain the Price Bid as per the BoQ.

1.18.4 The scanned copies of the E-bid shall be typed or written in indelible ink and shall be signed by the Bidder or a person(s) duly authorised to bind the Bidder to the Contract. All pages of the bid, except for un-amended printed literature, shall be initialed by the person(s) signing the bid detailing his/her name and contact details.

1.18.5 Any interlineations, erasures or overwriting shall be valid only if they are initialed by the persons or persons signing the bid.

D. Submission and sealing of E-Bids

1.19. Submission, Sealing and Marking of Bids

1.19.1 Bids shall be submitted online only at GeM website https://www.gem.gov.in (Bids received in manual form/Offline mode/FAX/E-mail shall not be accepted under any circumstances.)

1.19.2 The Bidder shall download the Tender Enquiry Document directly from the website https://www.gem.gov.in and shall not tamper/modify it in any manner. In case if the same is found to be tampered/modified in any manner, Tender/Bid will be summarily rejected and EMD would be forfeited.

1.19.3 The complete bidding process is online. Bidders' should be in possession of valid Digital Signature Certificate (DSC) of Class - III for online submission of bids. Prior to bidding DSC need to be registered in the website mentioned above. If the envelope is not digitally signed and encrypted the Purchaser shall not accept such open Bids for the purpose of evaluation and shall be treated as non-responsive and will be rejected.

1.19.4 Bidders' are advised to go through "Bidder Manual Kit", "System Settings", and "FAQ", links available in the login page of the GeM portal for guidelines, procedures and system requirements. In case of any technical difficulty, Bidders' may contact the help desk numbers & email IDs mentioned at the GeM portal. Every Bidder will be required to obtain a Class-III Digital Signature (DSC) for submission of their Bids.

1.19.5 Bidders' are advised to visit GeM website https://www.gem.gov.in regularly to keep themselves updated, for any changes/modifications in the Tender Enquiry Document.

1.19.6 Intending bidders are advised to visit GeM website https://www.gem.gov.in regularly till the closing date for submission of bid, for any corrigendum.

1.19.7 Bid Security/Earnest Money Deposit shall be deposited through Bank Guarantee/Demand Draft drawn in favour of "The Director, National Aerospace Laboratories, Bengaluru". The original Bid Security/EMD must be delivered at address mentioned in Sl.No. 2 of the NIT till bid submission date and time as mentioned in "Date Sheet", failing which the bid shall be summarily rejected.

1.19.8 Purchaser shall receive the bids online through GeM portal only. The GeM portal shall automatically stop accepting bids after the scheduled date and time specified in the Tender Document. Partially submitted bids shall be treated as invalid and shall not be processed.

1.20. Due date for Submission of Bids

1.20.1 EMD/BS must be received by the Purchase at the address specified in NIT not later than the time and date specified in NIT.

1.20.2 Bidders' are advised to upload and submit their e-Bids on time within the due date for submission of E-Bids in view of the electronic process so as to avoid last minute issues.

1.20.2 The Purchaser may, at its discretion, extend the due date for submission of bids by amending the bid documents in accordance with Clause relating to Amendment of Bidding Documents in which case all rights and obligations of the Purchaser and Bidders' previously subject to the deadline will thereafter be subject to the due date as extended.

1.21. Late Submission of EMD / BS

1.21.1 Any Bid Security/EMD received by the Purchaser after the due date for submission of bids prescribed by the Purchaser is liable to be rejected.

1.21.2 Bidders' must note that the GeM portal shall not permit uploading of bids after the scheduled time of submission.

1.22 Withdrawal, substitution and Modification of Bids

1.22.1 The bidder may withdraw, correct or modify his digitally signed bid after submission prior to the deadline for submission of bids, through provisions of GeM portal.

1.22.2 The bidder is not allowed to modify or withdraw bid after deadline for submission of bids.

E. Opening and Evaluation of E-Bids

1.23 Opening of E-Bids by the Purchaser

1.23.1 The E-bids shall be opened online by authorised officials of the Purchaser as per schedule given in Date Sheet. In case of Two Bid tender, the Price Bid of only those bidders' who qualified in technical evaluation, shall be opened.

1.23.2 In the event of the specified date of Bid opening being declared a holiday for the Purchaser, the Bids shall be opened at the appointed time and location on the next working day. In Two Bid system, the Price Bid shall be opened only after the technical evaluation. No separate intimation shall be sent to the bidders' in this regard.

1.23.3 Since, E-bid is an online process; the E-bid opening or any other process may be delayed due to any technical/server issue. If any such issue arises, this will not tantamount to process delay and CSIR-NAL will not be responsible for the same.

1.23.4 On opening of bids online, accepting the bid will not mean that the firm is technically or financially qualified.

1.23.5 Bids will be opened online on the specified date and time. There is no need to visit purchaser's premises to attend bid opening. If the bids cannot be opened on due date and time due to any technical or administrative issues i.e., network/connectivity issues, holidays, office closure etc. they will be opened as soon as the issue is resolved or on next working day as the case may be. Bids submitted online on GeM portal are safe, secure, and confidential and can be seen only after opening by following the due process.

1.24. Confidentiality

1.24.1 Information pertaining to the examination, evaluation, comparison, and post qualification of bids, and recommendation to award the contract shall not be disclosed to bidders' or any other persons not officially concerned with such process until publication of the Contract. However, decisions taken during process of tender evaluation shall be hosted on GeM portal.

1.24.2 Any effort by a Bidder to influence the Purchaser in the examination, evaluation, comparison, and post qualification of the bids or contract award decisions may result in the rejection of its Bid.

1.25. Clarification of Bids

1.25.1 To assist in the examination, evaluation, comparison and post qualification of the bids, the Purchaser may, at its discretion, ask the Bidder for a clarification of its bid. The request for clarification and the response shall be in writing and no change in price(s) or substance of the bid shall be sought, offered or permitted. However, no negotiation shall be held except with the lowest bidder, at the discretion of the purchaser. Any clarification submitted by a bidder with regard to its bid which is not in response to a request by the purchaser shall not be considered.

1.26. Preliminary Examination

1.26.1 The Purchaser shall examine the bids to confirm that all documents and technical documentation requested in ITB Clause 1.10.1, have been provided, and to determine the completeness of each document submitted.

1.26.2 The Purchaser shall confirm that the following documents and information have been provided in the Bid. If any of these documents or information is missing, the offer shall be rejected.

<table>
<tr><td>(a)</td><td colspan="2">All the tenders received will first be scrutinised to see whether the tenders meet the basic requirements as incorporated in the tender enquiry document. The tenders, which do not meet the basic requirements, are to be treated as unresponsive and ignored. The following are some of the important points, for which a tender may be declared as unresponsive and to be ignored, during the initial scrutiny:</td></tr>
<tr><td></td><td>(i)</td><td>The Bid is unsigned</td></tr>
<tr><td></td><td>(ii)</td><td>The Bidder is not eligible.</td></tr>
<tr><td></td><td>(iii)</td><td>The Bid validity is shorter than the required period.</td></tr>
<tr><td></td><td>(iv)</td><td>The Bidder has quoted for goods manufactured by a different firm without the required authority letter from the proposed manufacturer.</td></tr>
<tr><td></td><td>(v)</td><td>Bidder has not agreed to give the required performance security or has not furnished the bid security.</td></tr>
<tr><td></td><td>(vi)</td><td>The goods quoted are sub-standard, and not meeting the required specifications etc.</td></tr>
<tr><td></td><td>(vii)</td><td>Against the requirement (Scope of Supply), the bidder has not quoted for the entire requirement as specified in Chapter-4.</td></tr>
<tr><td></td><td>(viii)</td><td>The bidder has not agreed to some of the essential condition(s) incorporated in the tender enquiry.</td></tr>
<tr><td>(b)</td><td colspan="2">BoQ (Price Bid) of the technically qualified bidders shall be liable to rejection, if any condition is added in BoQ which contradicts the technical bid/unpriced bid.</td></tr>
</table>

1.27 Bidder's right to question rejection.

1.27.1 A Bidder shall have the right to be heard in case Bidder feels that a proper procurement process is not being followed and/or tender has been rejected wrongly. Only a directly affected bidder can represent in this regard as under:

i)	Only a bidder who has participated in the concerned procurement process i.e., pre-qualification, bidder registration or bidding, as the case may be, can make such representation;	
ii)	In case pre-qualification bid has been evaluated before the bidding of technical bids, an application for review with respect to the technical bid may be filed only by a bidder who has qualified in pre-qualification bid;	
iii)	In case technical bid has been evaluated before the opening of the financial bid, an application for review in relation to the financial bid may be filed only by a bidder whose technical bid is found to be acceptable.	
iv)	The following decisions of the purchaser in accordance with the provision of internal guidelines shall not be subject to review:	
	a)	Determination of the need for procurement;
	b)	Selection of the mode of procurement or bidding system;
	c)	Choice of selection procedure;
	d)	Provisions limiting participation of bidders' in the procurement process;
	e)	The decision to enter into negotiations with the L1 bidder;
	f)	Cancellation of the procurement process except where it is intended to subsequently re-tender the same requirements;
	g)	Issues related to ambiguity in terms of contract may not be taken up after a contract has been signed, all such issues should be highlighted before consummation of the contract by the vendor/bidder/contractor; and
	h)	Complaints against specifications except under the premise that they are either vague or too specific so as to limit the competition may be permissible.

1.27.2 In case a Bidder feels aggrieved by the decision of the purchaser, the Bidder is at liberty to send their representation in writing to the Purchaser's address as indicated in Special Conditions of Contract (SCC) within 05 (five) working days from the date of communication of the purchaser intimating the rejection for reconsideration of the decision by the purchaser.

1.28 Responsiveness of Bids

1.28.1 Prior to the detailed evaluation, the purchaser will determine the substantial responsiveness of each bid to the bidding documents. For purposes of this clause, a substantive responsive bid is one, which conforms to all the terms and condition of the bidding documents without material deviations, reservations or omissions. A material deviation, reservation or omission is one that:

(a)	Affects in any substantial way the scope, quality, or performance of the Goods and Related Services specified in the Contract; or
(b)	Limits in any substantial way, inconsistent with the Bidding Documents, the Purchaser's rights or the Bidder's obligations under the Contract; or
(c)	If rectified, would unfairly affect the competitive position of other bidders' presenting substantially responsive bids.

1.28.2 The purchasers' determination of a bid's responsiveness is to be based on the contents of the bid itself without recourse to extrinsic evidence.

1.28.3 If a bid is not substantially responsive, it will be rejected by the Purchaser and may not subsequently be made responsive by the Bidder by correction of the material deviation, reservation or omission.

1.28.4 If a bidder quotes NIL charges/consideration, the bid shall be treated as unresponsive and will not be considered.

1.29 Non-Conformity, Error and Omission

1.29.1 Provided that a Bid is substantially responsive, the Purchaser may waive any non- conformities or omissions in the bid that do not constitute a material deviation.

1.29.2 Provided that a bid is substantially responsive, the Purchaser may request that the Bidder to submit the necessary information or documentation, within reasonable period of time, to rectify the non-material non-conformities or omissions in the bid related to documentation requirements. Such omission shall not be related to any aspect of the price of the Bid. Failure of the Bidder to comply with the request may result in the rejection of its Bid.

1.29.3 Provided that the Bid is substantially responsive, the Bid shall be evaluated as per the BoQ.

1.29.4 Provided that a bid is substantially responsive, the purchaser may request that a bidder may confirm the correctness of arithmetic errors as done by the purchaser within a target date. In case, no reply is received, the bid submitted shall be ignored and its Bid Security may be forfeited.

1.30 Examination of Terms & Conditions, Technical Evaluation

1.30.1 The Purchaser shall examine the Bid to confirm that all the terms and conditions specified in the GCC and the SCC have been accepted by the Bidder without any material deviation or reservation.

1.30.2 The Purchase shall examine the Bid to confirm that Eligibility and Qualification criteria as specified is fulfilled by the Bidder.

1.30.3 The Purchaser shall evaluate the technical aspects of the Bid submitted in accordance with ITB Clause 1.15, to confirm that all requirements specified in Schedule of Requirements of the Bidding Documents have been met without any material deviation or reservation.

1.30.4 In case, after the examination of the terms and conditions and the technical evaluation, the Purchaser determines that the Bid is not substantially responsive in accordance with ITB Clause 1.28, it shall reject the Bid.

1.30.5 Any bidder seeking benefit/preference under MSME/Make in India or any other policy/scheme of the Government of India, which is currently in vogue must enclose all the relevant documents/certificates etc., at the time of bidding itself, for claiming such benefits. The bidder must also clearly highlight the provisions of the policy and the kind of benefit being sought by it for which it meets the conditions for claiming such benefits. It may be noted that no other benefit/preference/concessions which is beyond the scope of the policy or the bidder's entitlement under the policy shall be considered by us. If the bidder fails to claim such benefit and/or fail to submit necessary documents/certificates in support of its claim at the time of bidding itself, its claim shall not be entertained at a later stage in the bidding process and no opportunity shall be provided to it to submit any document/certificate.

1.31 Conversion to Single Currency

1.31.1 To facilitate evaluation and comparison, the Purchaser will convert all quoted prices expressed in various currencies in which the bid prices are payable to Indian Rupees at the selling exchange rate established by any bank in India as notified in the newspapers on the date of bid opening in the case of single bid and the rates prevalent on the date of opening of the technical bids in case of two bid. For this purpose, "Bill Currency Selling", exchange rate notified in www.xe.com or www.rbi.org or any other website could also be used by the purchaser.

1.32 Evaluation and comparison of bids

1.32.1 The Purchaser shall evaluate each bid that has been determined, up to this stage of the evaluation, to be substantially responsive.

1.32.2 To evaluate a Bid, the Purchaser shall only use all the factors, methodologies and criteria defined below. No other criteria or methodology shall be permitted.

1.32.3 Price Preference

1.32.3.1 Price preference to Local Suppliers' as per Make in India procurement policy of Govt of India Reference: DPIIT Order No. P-45021/2/2017-PP (BE-II) dated 16th September, 2020, issued by the Ministry of Commerce, Government of India, as amended from time to time on the date of issue of order.

Only Class-I and Class-II local suppliers' are eligible to bid for all procurements other than Global Tender Enquiry and purchase preference shall be given as specified below:

1) Definitions of terms applicable to Make in India procurement policy of Government of India

a)	'Local Content', means the amount of value added in India which shall be the total value of the item procured (excluding net domestic indirect taxes) minus the value of imported content in the item (including all customs duties) as a proportion of the total value, in per cent.
b)	'Class-I Local Supplier', means a supplier/provider whose product offered for procurement meets the local content of 50 (twenty) per cent and above.
c)	'Class-II Local Supplier', means a supplier provider whose product offered for procurement meets the local content of 20 (twenty) per cent and above but less than 50 (fifty) per cent.
d)	'Non-Local Supplier', means a supplier/provider whose product offered for procurement meets the local content of less than 20 (twenty) per cent.
e)	'L1', means the lowest tender or lowest bid or the lowest quotation received in this tender, bidding process or other procurement solicitation as adjudged in the evaluation process as per the tender or other procurement solicitation.
f)	'Margin of Purchase Preference', means the maximum extent to which the price quoted by a local supplier may be above the L1 for the purpose of purchase preference.

2) Tendered goods are divisible in nature, the following procedure shall be followed to evaluate L1 bidder and bidder for award of contract with the margin of purchase preference of 20 (twenty) per cent to Class-I Local supplier:

a)	Among all qualified bids, the lowest bid will be termed as L1. If L1 is from a Class-I local supplier, the contract for full quantity will be awarded to L1.
b)	If L1 bid is not from a Class-I local supplier, 50 (fifty) per cent of the order quantity shall be awarded to L1. Thereafter, the lowest bidder among the Class-I local suppliers, will be invited to match the L1 price for the remaining 50 (fifty) per cent quantity subject to the local supplier's quoted price falling within the margin of purchase preference, and contract for that quantity shall be awarded to such Class-I local supplier subject to matching the L1 price. In case such lowest eligible Class-I local supplier fails to match the L1 price or accepts less than the offered quantity, the next higher Class-I local supplier within the margin of purchase preference shall be invited to match the L1 price for remaining quantity and so on, and contract shall be awarded accordingly. In case some quantity is still left uncovered on local suppliers, then such balance quantity may also be ordered on the L1 bidder.

3) Tendered goods are not divisible in nature, the following procedure shall be followed to evaluate L1 bidder and bidder for award of contract with the margin of purchase preference of 20 (twenty) per cent to Class-I Local supplier:

a)	Among all qualified bids, the lowest bid will be termed as L1. If L1 is from a Class-I local supplier, the contract will be awarded to L1.
b)	If L1 is not from a Class-I local supplier, the lowest bidder among the Class-I local suppliers, will be invited to match the L1 price subject to local supplier's quoted price falling within the margin of purchase preference, and the contract shall be awarded to such Class-I local supplier subject to matching the L1 price.
c)	In case such lowest eligible Class-I local supplier fails to match the L1 price, the Class-I local supplier with the next higher bid within the margin of purchase preference shall be invited to match the L1 price and so on and contract shall be awarded accordingly. In case none of the Class-I local suppliers within the margin of purchase preference matches the L1 price, then the contract may be awarded to the L1 bidder.
d)	Only Class-II Local suppliers are not eligible to get price preference under this clause.

4) In tenders where contract is awarded to multiple bidders subject to matching of L1 rates or otherwise, the 'Class-I local supplier', shall get purchase preference over 'Class-II local supplier', as well as 'Non-local supplier', as per following procedure:

In case there is sufficient local capacity and competition for the item to be procured, as notified by the nodal ministry, only Class I local suppliers shall be eligible to bid. As such, the multiple suppliers, who would be awarded the contract, should be all and only 'Class I Local suppliers'.

a) In other cases, 'Class II local suppliers', and 'Non local suppliers', may also participate in the bidding process along with 'Class I Local suppliers'.

b) If 'Class I Local suppliers', qualify for award of contract for at least 50 (fifty) per cent of the tendered quantity in any tender, the contract may be awarded to all the qualified bidders as per the award criteria stipulated in the bid documents. However, in case 'Class I Local suppliers', do not qualify for award of contract for at least 50 (fifty) per cent of the tendered quantity, purchase preference shall be given to the 'Class I local supplier', over 'Class II local suppliers'/'Non local suppliers', provided that their quoted rate falls within 20 (twenty) per cent margin of purchase preference of the highest quoted bidder considered for award of contract so as to ensure that the 'Class I Local suppliers', taken in totality are considered for award of contract for at least 50 (fifty) per cent of the tendered quantity.

c) First purchase preference shall be given to the lowest quoting 'Class-I local supplier', whose quoted rates fall within 20 (twenty) per cent margin of purchase preference, subject to its meeting the prescribed criteria for award of contract as also the constraint of maximum quantity that can be sourced from any single supplier. If the lowest quoting 'Class-I local supplier', does not qualify for purchase preference because of the aforesaid constraints or does not accept the offered quantity, an opportunity may be given to next higher 'Class-I local supplier', falling within 20 (twenty) per cent margin of purchase preference, and so on.

5) For more clarity in this regard, following table is furnished:

Quantity of Tendered goods	Price quoted by Class-I Local supplier	Finalisation of tender
Can be Split	L1	Full order on Local supplier

Can be Split	Not L1 but within L1 + 20 per cent	50 per cent order on Class-I Local supplier subject to matching L1 price
Cannot be Split	L1	Full Order on Local supplier
Cannot be Split	Not L1 but within L1+20 per cent	Full Order on Class-I Local supplier subject to matching L1 price

6) Verification of local content

a)	The 'Class-I local Supplier'/'Class-II local Supplier', at the time of tender, bidding or solicitation shall be required to indicate percentage of local content and provide self-certification (Chapter-8: Annexure-I & J), that the item offered meets the local content requirement for 'Class-I local Supplier'/'Class-II local Supplier', as the case may be.
b)	Bidder shall also give price break up and the location(s) at which the local value addition is made in the form of Annexure-I (Chapter-8). Annexure- J (Chapter-8) should be enclosed with Technical bid and Annexure-J should be enclosed as part of Price bid. Bidder cannot claim the services such as transportation, insurance, installation, commissioning, training, after sales service (warranty or AMC/CMC support), consultancy and custom clearance including custom duty as local value addition.
c)	In cases of procurement for a value in excess of Rs. 10 (ten) crores, the 'Class-I local Supplier'/'Class-II local Supplier', shall be required to provide a certificate from the statutory auditor or cost auditor of the company (in the case of companies) or from a practicing cost accountant or practicing chartered accountant (in respect of Contractors' other than companies) giving the percentage of local content.
d)	False declarations will be in breach of the Code of Integrity under Rule 175(1)(i)(h) of the General Financial Rules for which a bidder or its successors can be debarred for up to 2 (two) years as per Rule 151 (iii) of the General Finance Rules along with such other actions as may be permissible under law.

1.32.3.2 Price Preference to MSMEs

1) In case MSME bidder is L1 entire value of the tender is to be ordered on the L1 MSME bidder.

2) In tender, participating Micro and Small Enterprises quoting price within price band of L1 + 15 per cent shall also be allowed to supply a portion of requirement by bringing down their price to L1 price in a situation where L1 price is from someone other than a Micro and Small Enterprise and such Micro and Small Enterprise shall be allowed to supply upto 25 per cent of the total tendered value (where the tender quantity can be split).

3) In case of more than one such MSMEs are in the price band of L1 + 15 (fifteen) per cent and matches the L1 price, the supply may be shared proportionately if the goods can be split.

4) In case the tendered quantity of goods cannot be split, MSME shall be allowed to supply total tendered quantity provided their quoted price is within a price band of L1 + 15 (fifteen) per cent and they match the L1 price.

5) If the quantity cannot be split and there are more than one eligible MSME bidders (price band within L1+15 per cent) then the opportunity to match the L1 rate of the tender shall be given first to MSME (who have quoted lowest rate among the MSMEs within the price band of L1+15 per cent) and the total quantity shall be awarded to him after matching the L1 price of the tender.

6) If the MSME who have quoted lowest rate among the MSMEs in the price band of L1 + 15 per cent do not agree to match the rate of L1 of the tender, then the next ranked MSME bidder who has quoted within the price band of L1 + 15 per cent in order shall be given chance to match the rate of L1 for award of the quantity/order.

7) For more clarity in this regard, following table is furnished:

Quantity of tendered goods	Price quoted by MSME	Finalisation of tender
Can be Split	L1	Full order on MSME
Can be Split	Not L1 but within L1+15 per cent	25 per cent order on MSME subject to matching L1
Cannot be Split	L1	Full Order on MSME
Cannot be Split	Not L1 but within L1+15 per cent	Full Order on MSME subject to matching L1 price

8) The purchase preference to MSME is not applicable for works contracts where supply of goods not produced by MSMEs is also involved.

9) Price preference shall be made applicable subject to bidder meeting the following conditions as MSME firm:

a)	MSMEs participating in the tender must submit valid and authorised copy of certificate of registration with any one of the above agencies. In case of bidders submitting DIC registration certificate shall attach original notarised copy of the DIC certificate. The MSME's Bidder to note and ensure that nature of services and goods/items manufactured mentioned in MSME's certificate matches with the nature of the services and goods/items to be supplied as per the tender.
b)	Traders/resellers/distributors/authorised agents will not be considered for availing benefits under Public Procurement Policy: 2012, for MSMEs as per MSME guidelines issued by MoMSME.
c)	The registration certificate issued from any one of the above agencies must be valid as on Bid closing date of the tender. Bidder shall ensure validity of registration certificate in case bid closing date is extended.
d)	The MSMEs who have applied for registration or renewal of registration with any of the above agencies/bodies, but have not obtained the valid certificate as on close date of the tender, are not eligible for EMD exemption/preference.

1.32.4 The bids shall be evaluated on the basis of final landing cost which shall be arrived as under and as per the Format given in BoQ of GeM:

(a) For Goods manufactured in India

i)	The price of the goods quoted ex-works including all taxes already paid.
ii)	GST and other taxes, if any which will be payable on the goods if the contract is awarded.
iii)	Charges for inland transportation, insurance and other local services required for delivering the goods at the desired destination.
iv)	Wherever applicable, the cost towards the installation, commissioning, spares, extended warranty, AMC/CMC, site preparation and training including any incidental services, if any.

(b) For Goods manufactured abroad

i)	The price of the goods, quoted on FCA (named place of delivery abroad) or FOB (named port of shipment), as specified in the bidding document.
ii)	The charges for insurance and transportation of the goods to the port/place of destination.

iii)	The agency commission, if any.
iv)	Wherever applicable, the cost towards the installation, commissioning, spares, extended warranty, AMC/CMC, site preparation and training including any incidental services, if any.

1.32.5 The comparison between the indigenous and the foreign offers shall be made on FOR destination basis and CIF/CIP basis respectively. However, the CIF/CIP prices quoted by any foreign bidder shall be loaded further as under:

(a)	Towards customs duty and other statutory levies–as per applicable rates.
(b)	Towards custom clearance, inland transportation etc.– 2 (two) per cent of the CIF/CIP value.

1.32.6 In case of Purchase of many items against one tender, which are not inter-dependent or where compatibility is not a problem, normally the comparison would be made on Ex-works, (in case of Indigenous items) and on FOB/FCA (in case of Imports) prices quoted by the firms for identifying the lowest quoting firm for each item.

1.32.7 Orders for imported Goods need not necessarily be on FOB/FCA basis rather it can be on the basis of any of the incoterm latest edition as may be amended from time to time by the International Chamber of Commerce (ICC) or any other designated authority and favourable to the purchaser

1.32.8 Wherever the price quoted on FOB/FCA and CIF/CIP basis are the same, the Contract would be made on CIF/CIP basis only.

1.32.9 The GCC and the SCC shall specify the mode of transport i.e., whether by Air/Sea/Road/Rail.

1.32.10 There is no provision to purchase optional items. The specifications embodied in the tender documents would be the basis of evaluating the responsiveness of bids received.

1.32.11 The Purchaser shall compare all substantially responsive bids to determine the lowest valuated bid, in accordance with ITB Clause 1.32.

1.32.12 Where there is no mention of packing, forwarding, freight, insurance charges, taxes etc. such offers shall be rejected as incomplete.

1.33 Contacting the Purchaser

1.33.1 Subject to ITB Clause 1.25, no Bidder shall contact the Purchaser on any matter relating to its bid, from the time of the bid opening to the time of award of Contract.

1.33.2 Any effort by a Bidder to influence the Purchaser in its decisions on bid evaluation, bid comparison or contract award may result in rejection of the Bidder's bid.

1.34 Post qualification

1.34.1 In the absence of pre-qualification, the Purchaser will determine to its satisfaction whether the Bidder that is selected as having submitted the lowest evaluated responsive bid is qualified to perform the contract satisfactorily, in accordance with the criteria listed in ITB Clause 1.15.

1.34.2 The determination will take into account the eligibility criteria listed in the bidding documents and will be based upon an examination of the documentary evidence of the Bidder's qualifications submitted by the Bidder, as well as such other information as the Purchaser deems necessary and appropriate.

1.34.3 An affirmative determination will be a prerequisite for award of the contract to the Bidder. A negative determination will result in rejection of the Bidder's bid.

F. AWARD OF CONTRACT

1.35 Negotiations

1.35.1 Normally, there shall not be any negotiation. Negotiations, if at all, shall be an exception and only in the case of items with limited source of supply. Negotiations shall be held with the lowest evaluated responsive bidder. Counter offers tantamount to negotiations and shall be treated at par with negotiations.

1.36 Award Criteria

1.36.1 Subject to ITB Clause 1.39, the Purchaser will award the contract to the successful Bidder whose bid has been determined to be substantially responsive and has been determined to be the lowest evaluated bid, provided further that the Bidder is determined to be qualified to perform the contract satisfactorily. The details of the award would be hosted on the website of the Purchaser and GeM website https://www.gem.gov.in.

1.37 Purchaser's right to vary-Quantities at Time of Award

1.37.1 The Purchaser reserves the right at the time of award of the Contract to increase or decrease the quantity of goods and services originally specified in the Schedule of Requirements to the extent of 25 (twenty-five) per cent without any change in unit price or other terms and conditions of the Purchase Order.

1.38 Option Clause

1.38.1 The Purchaser reserves the right to increase or decrease the quantity of the required goods up to 25 (twenty-five) per cent at any time, till final delivery date (or the extended delivery date of the contract), by giving reasonable notice even though the quantity ordered initially has been supplied in full before the last date of the delivery period (or the extended delivery period).

1.39 Purchaser's right to accept Any Bid and to reject any or All Bids

1.39.1 The Purchaser reserves the right to accept or reject any bid, and to annul the bidding process and reject all bids at any time prior to the award of Contract, without thereby incurring any liability to the affected Bidder or Bidders.

1.40 Notification of Award

1.40.1 Prior to the expiration of the period of bid validity, the Purchaser will notify the successful bidder in writing by registered letter or by cable or telex or fax or e-mail that the bid has been accepted and a separate purchase order shall follow through post.

1.40.2 Until a formal contract is prepared and executed, the notification of award should constitute a binding contract.

1.40.3 Upon the successful Bidder's furnishing of the signed Contract Form and performance security pursuant to ITB Clause 1.43, the Purchaser will promptly notify each unsuccessful Bidder and will discharge its bid security.

1.41 Signing of Contract

1.41.1 Promptly after notification, the Purchaser shall send the successful Bidder the Agreement/Purchase Order.

1.41.2 Within 21 (twenty-one) days of date of the Purchase Order, the successful Bidder shall sign with date and return it to the Purchaser.

1.42 Order Acceptance

1.42.1 The successful bidder should submit Order acceptance within 14 (fourteen) days from the date of issue of order/signing of contract, failing which it shall be presumed that the Bidder is not interested and the bid security is liable to be forfeited pursuant to ITB Clause 1.16.11.

1.42.2 The order confirmation must be received within 14 (fourteen) days. However, the Purchaser has the powers to extend the time frame for submission of order confirmation beyond the original date. Even after extension of time, if the order confirmation is not received, the contract is liable to be cancelled provided that the purchaser, on being satisfied that it is not a case of cartelisation and the integrity of the procurement process has been maintained, may, for cogent reasons, offer the next successful bidder an opportunity to match the financial bid of the first successful bidder, and if the offer is accepted, award the contract to the next successful bidder at the price bid of the first successful bidder.

1.43 Performance Security

1.43.1 Within 21 (twenty-one) days of receipt of the notification of award/Purchase Order as per GCC Clause 2.12, the supplier shall furnish Performance Security for the amount specified in SCC, valid for the time 60 (sixty) days beyond the fulfillment of all contractual obligations including warranty.

1.44 Integrity Pact

1.44.1 Integrity Pact binds both buyers and sellers to ethical conduct and transparency in all activities from pre-selection of bidders, bidding and contracting, implementation, completion and operation related to the contract.

1.44.2 The Integrity pact essentially envisages an agreement between the prospective bidders and the buyer, committing the persons/officials of both sides, not to resort to any corrupt practices in any aspect/stage of the contract. Only those bidders, who commit themselves to such a Pact with the buyer, would be considered competent to participate in the bidding process. In other words, entering into this Pact would be a preliminary qualification. The essential ingredients of the Pact include:

(i)	Promise on the part of the Purchaser to treat all bidders' with equity and reason and not to seek or accept any benefit, which is not legally available;
(ii)	Promise on the part of bidders' not to offer any benefit to the employees of the Purchaser not available legally and also not to commit any offence under Prevention of Corruption Act, 1988 or Indian Penal Code 1860;
(iii)	Promise on the part of bidders' not to enter into any undisclosed agreement or understanding with other bidders' with respect to prices, specifications, certifications, subsidiary contracts etc.
(iv)	Undertaking (as part of Fall Clause) by the bidders' that they have not and will not sell the same material/equipment at prices lower than the bid price;
(v)	Foreign bidders' to disclose the name and address of agents and representatives in India and Indian Bidders' to disclose their foreign principals or associates;

(vi)	Bidders to disclose the payments to be made by them to agents/brokers or any other intermediary;
(vii)	Bidders' to disclose any past transgressions committed over the specified period with any other company in India or abroad that may impinge on the anti-corruption principle;
(viii)	Integrity Pact lays down the punitive actions for any violation.

1.44.3 Each page of such Integrity pact proforma would be duly signed by Purchaser's competent signatory. All pages of the Integrity Pact are to be returned by the bidder (along with the technical bid) duly signed by the same signatory who signed the bid, i.e., who is duly authorised to sign the bid and to make binding commitments on behalf of his company. Any bid not accompanied by Integrity Pact duly signed by the bidder shall be considered to be a non-responsive bid and shall be rejected straightway.

1.44.4 The SCC shall specify whether there is a need to enter into a separate Integrity pact or not.

1.44.5 The Integrity Pact would be effective from the date of invitation of bids till complete execution of the contract.

1.44.6 The names and contact details of the Independent External Monitors (IEM) on the event of the need of IP is as detailed in the SCC.

1.44.7 The modal format of IP is at Chapter-7.

1.44.8 As a first option, dispute resolution is available through panel of IEMs' apart from arbitration clause. However, the fees/exemptions on the said account shall be equally shared by the parties.

1.45 Assistance to Bidders:

1.45.1 Any queries pertaining to the Tender Enquiry Document and the terms and conditions contained therein should be addressed to the Tender Inviting Authority for a tender or the relevant contact person indicated in the NIT.

1.45.2 Any queries relating to the process of online bid submission or queries relating to GeM Portal in general may be directed to the 24x7 GeM Portal Helpdesk.

CHAPTER 2

CONDITIONS OF CONTRACT

A GENERAL CONDITIONS OF CONTRACT (GCC)

Clause No.	Contents
2.1	Definitions
2.2	Contract Documents
2.3	Fraud, Corruption and Code of Integrity
2.4	Joint Venture, Consortium or Association
2.5	Scope of Supply
2.6	Suppliers' Responsibilities
2.7	Contract price
2.8	Copy Right and Patent Indemnity
2.9	Application
2.10	Standards
2.11	Use of Contract Documents and Information
2.12	Performance Security
2.13	Installation, Commissioning, Demonstration, Inspection, Test and Training
2.14	Packing
2.15	Delivery and Documents
2.16	Insurance
2.17	Transportation
2.18	Incidental Services
2.19	Spare Parts
2.20	Warranty
2.21	Terms of Payment
2.22	Change Orders and Contract Amendments
2.23	Assignment
2.24	Subcontracts
2.25	Extension of time
2.26	Penalty Clause/Liquidated Damages
2.27	Termination for Default
2.28	Force Majeure
2.29	Termination for insolvency
2.30	Termination for Convenience
2.31	Settlement of Disputes
2.32	Governing Language
2.33	Applicable Law
2.34	Notices
2.35	Taxes and Duties
2.36	Right to use Defective Goods
2.37	Protection against Damage
2.38	Site preparation and installation
2.39	Import and Export Licenses
2.40	Risk Purchase Clause
2.41	Purchaser's right to vary Quantities/Option Clause
2.42	Integrity Pact
2.43	Order Acceptance

Note: The General Conditions of Contract shall form the part of Purchase Order / Contract.

GENERAL CONDITIONS OF CONTRACT (GCC)

2.1 Definitions

2.1.1 The following words and expressions shall have the meanings hereby assigned to them:

Sl No.	Words/ Expressions	Meaning
(a)	Contract	The Contract Agreement entered into between the Purchaser and the Supplier, together with the Contract Documents referred to therein, including all attachments, appendices, and all documents incorporated by reference therein.
(b)	Contract Documents	The documents listed in the Contract Agreement, including any amendments thereto.
(c)	Contract Price	The price payable to the Bidder as specified in the Contract Agreement, subject to such additions and adjustments thereto or deductions there from, as may be made pursuant to the Contract.
(d)	Day	Calendar day
(e)	Completion	The fulfilment of the Related Services by the Supplier in accordance with the terms and conditions set forth in the Contract.
(f)	GCC	The General Conditions of Contract.
(g)	Goods	All of the commodities, raw material, machinery and equipment, and/or other materials that the Supplier is required to supply to the Purchaser under the Contract
(h)	Services	The services incidental to the supply of the goods, such as transportation, insurance, installation, training and initial maintenance and other such obligations of the Supplier under the Contract.
(i)	SCC	The Special Conditions of Contract.
(j)	Subcontractor	Any natural person, private or government entity, or a combination of the above, to which any part of the Goods to be supplied or execution of any part of the Related Services is sub-contracted by the Supplier.
(k)	Bidder	The natural Person, Private or Government entity, or a combination of the above, whose bid to perform the Contract has been accepted by the Purchaser and is named as such in the Contract Agreement.
(l)	Council	The Council of Scientific & Industrial Research (CSIR), registered under the Societies Registration Act, 1860 of the Government of India having its registered office at No. 2, Rafi Marg, New Delhi-110001, Republic of India.
(m)	Purchaser	Any of the constituent Laboratory/Institute of the Council situated at any designated place in India as specified in SCC
(n)	The final destination	The place named in the SCC.

2.2 Contract Documents

2.2.1 Subject to the order of precedence set forth in the Contract Agreement, all documents forming the Contract (and all parts thereof) are intended to be correlative, complementary, and mutually explanatory. The Contract Agreement shall be read as a whole.

2.2.2 Successful bidder shall have to enter into Contract Agreement as per Contract Agreement as per Contract Form given in Chapter-7 within 14 (fourteen) days of placement of Purchase Order having above Rs.10 lakh or equivalent amount in foreign currency.

2.3 Fraud, Corruption and Code of Integrity

2.3.1 The Purchase requires that Bidders, suppliers, contractors and consultant, if any, observe the highest standard of ethics during the procurement and execution of such contracts. In pursuit of this policy,

(a) The terms set forth below are defined as follows:

I	Corrupt practice	The offering, giving, receiving, or soliciting, directly or indirectly, of anything of value to influence the action of a public official in the procurement process or in contract execution
II	Fraudulent practice	A misrepresentation or omission of facts in order to influence a procurement process or the execution of a contract
III	Collusive practice	A scheme or arrangement between two or more bidders, with or without the knowledge of the Borrower, designed to establish bid prices at artificial, non-competitive levels.
IV	Coercive practice	Harming or threatening to harm, directly or indirectly, person(s) or their property to influence their participation in the procurement process or affect the execution of a contract.

2.3.2 Without prejudice to and in addition to the rights of the Purchaser to other penal provisions as per the bid documents or contract, if the Purchaser comes to a conclusion that a (prospective) bidder/supplier, directly or through an agent, has violated this code of integrity in competing for the contract or in executing a contract, the Purchaser may take appropriate measures including one or more of the following:

a)	Cancellation of the relevant contract and recovery of compensation for loss incurred by the purchaser;	
b)	Forfeiture or encashment of any other security or bond relating to the procurement;	
c)	Recovery of payments including advance payments, if any, made by the Purchaser along with interest thereon at the prevailing rate.	
d)	Provisions in addition to above:	
	1)	Removal from the list of registered suppliers and banning/debarment of the bidder from participation in future procurements of the purchaser for a period not less than one year;
	2)	In case of anti-competitive practices, information for further processing may be filed under a signature of the Joint Secretary level officer, with the Competition Commission of India;
	3)	Initiation of suitable disciplinary or criminal proceedings against any individual or staff found responsible

2.4 Joint Venture, Consortium or Association

2.4.1 If the Supplier is a joint venture, consortium, or association, all of the parties shall be jointly and severally liable to the Purchaser for the fulfilment of the provisions of the Contract and

shall designate one party to act as a leader with authority to bind the joint venture, consortium, or association. The composition or the constitution of the joint venture, consortium, or association shall not be altered without the prior consent of the Purchaser.

2.5 Scope of Supply

2.5.1 Scope of Supply (i.e., the Goods and Related Services to be performed) shall be as specified in Chapter - 4 i.e., Specifications and allied technical details.

2.6 Suppliers' Responsibilities

2.6.1 The Supplier shall supply all the Goods and Related Services included in the Scope of Supply, Clause 2.5 of the GCC and the Delivery and Completion Schedule, as per GCC Clause relating to delivery and document.

2.6.2 Amalgamation/Acquisition:
In the event the Manufacturer/Supplier proposes for amalgamation, acquisition or sale its business to any firm during the contract period, the Buyer/Successor of the Principal Company are liable for execution of the contract and also fulfilment of contractual obligations i.e., supply, installation, commissioning, warranty, maintenance/ replacement of spares accessories. The bidder may confirm this condition while submitting the bid.

2.7 Contract price

2.7.1 Prices charged by the Supplier for the Goods supplied and the Related Services performed under the Contract shall not vary from the prices quoted by the Supplier in its bid.

2.8 Copy Right and Patent Indemnity

2.8.1 Copy Right
The copyright in all drawings, documents, and other materials containing data and information furnished to the Purchaser by the Supplier herein shall remain vested in the Supplier, or, if they are furnished to the Purchaser directly or through the Supplier by any third party, including suppliers of materials, the copyright in such materials shall remain vested in such third party.

2.8.2 Patent Indemnity

a) The Supplier shall, subject to the Purchaser's compliance with GCC Sub-Clause 2.12.2, Indemnify and hold harmless the Purchaser and its employees and officers from and against any and all suits, actions or administrative proceedings, claims, demands, losses, damages, costs, and expenses of any nature, including attorney's fees and expenses, which the Purchaser may suffer as a result of any infringement or alleged infringement of any patent, utility model, registered design, trademark, copyright, or other intellectual property right registered or otherwise existing at the date of the Contract by reason of:

(a)	the installation of the Goods by the Supplier or the use of the Goods in India; and
(b)	the sale in any country of the products produced by the Goods

b) If any proceedings are brought or any claim is made against the Purchaser, the Purchaser shall promptly give the Supplier a notice thereof, and the Supplier may at its own expense and in the Purchaser's name conduct such proceedings or claim and any negotiations for the settlement of any such proceedings or claim.

2.9 Application

2.9.1 These General Conditions shall apply to the extent that they are not superseded by provisions in other parts of the Contract.

2.10 Standards

2.10.1 The Goods supplied and services rendered under this Contract shall conform to the standards mentioned in the Technical Specifications, and, when no applicable standard is mentioned, to the authoritative standard appropriate to the Goods' country of origin and such standards shall be the latest issued by the concerned institution.

2.11 Use of Contract Documents and Information

2.11.1 The Supplier shall not, without the Purchaser's prior written consent, disclose the Contract, or any provision thereof, or any specification, plan, drawing, pattern, sample or information furnished by or on behalf of the Purchaser in connection therewith, to any person other than a person employed by the Supplier in performance of the Contract. Disclosure to any such employed person shall be made in confidence and shall extend only so far, as may be necessary for purposes of such performance.

2.11.2 The Supplier shall not, without the Purchaser's prior written consent, make use of any document or information enumerated above except for purposes of performing the Contract.

2.11.3 Any document, other than the Contract itself, enumerated above shall remain the property of the Purchaser and shall be returned (in all copies) to the Purchaser on completion of the Supplier's performance under the Contract if so required by the Purchaser.

2.12 Performance Security

2.12.1 Within 21 (twenty-one) days of receipt of the notification of award of Contract, the Supplier shall furnish performance security (PS) in the amount specified in SCC, valid till 60 (sixty) days after the warranty period. Alternatively, the PS may also be submitted at the time of release of final payment in cases where part payment is made against delivery and part on installation. The PS, where applicable, shall be submitted in advance for orders where full payment is to be made on Letter of Credit (L/C) or on delivery. In this case, submission of PS at the time of negotiation of documents through Bank would be stipulated as a condition in the L/C and the BS should be kept valid till such time the PS is submitted.

2.12.2 The proceeds of the performance security shall be payable to the Purchaser as compensation for any loss resulting from the Supplier's failure to complete its obligations under the Contract.

2.12.3 The Performance Security shall be denominated in Indian Rupees for the offers received for supplies within India and denominated in the currency of the contract in the case of offers received for supply from foreign countries or in equivalent Indian Rupees in case the Performance Security is submitted by the Indian Agent.

2.12.4 In the case of imports, the PS may be submitted either by the principal or by the Indian agent and, in the case of purchases from indigenous sources, the PS may be submitted by either the manufacturer or their authorised dealer/bidder.

2.12.5 The Performance Security shall be in one of the following forms:

(a)	A Bank Guarantee or stand by Letter of Credit issued by a Nationalised bank located in India or a Foreign bank with its operating branch in India in the form provided in the bidding documents OR
(b)	A Banker's cheque or Account Payee Demand Draft in favour of the purchaser issued by any Nationalised Bank OR
(c)	A Fixed Deposit Receipt pledged in favour of the Director, CSIR-NAL, Bengaluru.

2.12.6 The performance security will be discharged by the Purchaser and returned to the Supplier not later than 60 (sixty) days following the date of completion of the Supplier's performance obligations, including any warranty obligations, unless specified otherwise in SCC, without levy of any interest.

2.12.7 In the event of any contract amendment, the supplier shall, within 21 (twenty-one) days of receipt of such amendment, furnish the amendment to the performance security, rendering the same valid for the duration of the contract, as amended for further period of 60 (sixty) days thereafter.

2.12.8 The order confirmation must be received within 14 (fourteen) days. However, the Purchaser has the powers to extend the time frame for submission of order confirmation and submission of PS. Even after extension of time, if the order confirmation/PS are not received, the contract shall be cancelled.

2.12.9 Whenever, the bidder chooses to submit the Performance Security in the form of Bank Guarantee, Bidder should advise the issuing banker to send by Registered Post with acknowledgement due, the unstamped duplicate copy of the Bank Guarantee to the Purchaser with a covering letter to compare with the original BG for its correctness.

2.13 Installation, Commissioning, Demonstration, Inspections, Tests and Training.

2.13.1 The inspections and test, training required would be as detailed in Chapter-4 of the Bidding Document pertaining to Specifications and Allied Technical details.

2.13.2 The Bidder shall be responsible for Installation, Commissioning, Demonstration, Inspection, Tests and Training wherever applicable and for after sales service during the warranty and thereafter as specified in Chapter-4

2.14 Packing

2.14.1 The Supplier shall provide such packing of the Goods as is required to prevent their damage or deterioration during transit to their final destination as indicated in the Contract. The packing shall be sufficient to withstand, without limitations, rough handling during transit and exposure to extreme temperatures, salt and precipitation during transit and open storage. Packing case size and weights shall take into consideration, where appropriate, the remoteness of the Goods' final destination and the absence of heavy handling facilities at all points in transit.

2.14.2 The packing, marking and documentation within and outside the packages shall comply strictly with such special requirements as shall be provided for in the Contract including additional requirements are as given below or/and as specified in SCC and in any subsequent instructions ordered by the Purchaser:

The marking and documentation within and outside the packages shall be:

(a)	Each package should have a packing list within it detailing the part No(s), description, quantity etc.
(b)	Outside each package, the contract No., the name and address of the purchaser and the final destination should be indicated on all sides and on top.
(c)	Each package should be marked as 1/x, 2/x, 3/x……x/x, where "x" is the total No. of packages contained in the consignment.
(d)	All the sides and top of each package should carry an appropriate indication/label/stickers indicating the precautions to be taken while handling/storage

2.15 Delivery and Documents

2.15.1 Delivery of the Goods and completion of related services shall be made by the supplier in accordance with the terms and conditions specified by the Purchaser in the contract. The details of the shipping and/or other documents are given below or/and to be furnished by the supplier are specified in SCC.

Details of Shipping and other Documents to be furnished by the Bidder are :	
A)	For goods manufactured or supplied within India
	Within 24 hours of dispatch, the Supplier shall notify the purchaser the complete details of dispatch and also supply following documents by registered post/speed post and copies thereof by FAX/email.
(a)	Two copies of Supplier's Invoice indicating, inter-alia description and specification of the goods, quantity, unit price and total value.
(b)	Packing list
(c)	Certificate of country of origin
(d)	Insurance certificate, if required under the contract
(e)	Railway receipt/Consignment note
(f)	Manufacturer's warranty certificate and in-house inspection certificate, if any.
(g)	Inspection certificate issued by the purchaser's inspector, if any.
(h)	Any other document(s) as and when required in terms of the contract
NOTE:	
1	The nomenclature used for the item(s) description in the invoice(s), packing list(s) and the delivery note(s) etc. should be identical to that used in the contract. The dispatch particulars including the name of the transporter should also be mentioned in the Invoice(s).
2	The above documents should be received by the Purchaser before arrival of the Goods and, if not received, the Bidder will be responsible for any consequent expenses.
B)	For goods manufactured or supplied from abroad
	Within 24 hours of dispatch, the Supplier shall notify the purchaser the complete details of dispatch and also supply following documents by Registered Post/Courier and copies thereof by FAX/E-mail.
(a)	Two copies of Bidder's Invoice giving full details of the goods including quantity, value, etc.
(b	Packing list
(c)	Certificate of country of origin
(d)	Manufacturer's guarantee and Inspection certificate, if any.
(e)	Inspection certificate issued by the Purchaser's Inspector, if any.
(f)	Insurance Certificate, if required under the contract
(g)	Name of the Vessel/Carrier
(h)	Bill of Lading/Airway Bill
(i)	Port of Loading
(j)	Date of Shipment
(k)	Port of Discharge and expected date of arrival of goods
(l)	Any other document(s) as and when required in terms of the contract.
NOTE:	
1	The nomenclature used for the item description in the invoice(s), packing list(s) and the delivery note(s) etc. should be identical to that used in the contract. The dispatch particulars including the name of the transporter should also be mentioned in the Invoice(s).
2	The above documents should be received by the Purchaser before arrival of the Goods and, if not received, the Bidder will be responsible for any consequent expenses.
3	The clearing of the consignment at Bengaluru Airport shall be done by our authorised Custom House Agent (CHA). The corresponding shipping documents may be forwarded to them accordingly. It is advised to give us and our CHA, a pre-alert before the consignment is dispatched. In case if there is delay in clearing the consignment for **not** giving timely pre-alert the demurrage (ware house charges), if applicable has to be refunded to us.

2.15.2 The terms FOB, FCA, CIF, CIP, etc. shall be governed by the rules prescribed in the current edition of the Incoterms published by the International Chambers of Commerce (ICC), Paris.

2.15.3 The mode of transportation shall be as specified in SCC.

2.15.4 **High-sea sales delivery-term is not acceptable.**

2.15.5 The Bidders may please note that the delivery of the Goods should be strictly within the Delivery Schedule mentioned in the Chapter-4/Purchase Order.

2.15.6 Goods should not be dispatched until the Bidder/Supplier received a firm Purchase Order.

2.16 Insurance

2.16.1 Indigenous goods, the Goods supplied under the Contract shall be fully insured in Indian Rupees against any loss or damage incidental to manufacture or acquisition, transportation, storage and delivery in the manner specified in SCC.

2.16.2 Imported Goods, the purchaser elect to buy on CIF/CIP basis, the Goods supplied under the Contract shall be fully insured against any loss or damage incidental to manufacture or acquisition, transportation, storage and delivery in the manner specified in SCC.

2.16.3 Where delivery of the goods is required by the purchaser on CIF/CIP basis for Imported Goods or FOR destination for Indigenous Goods, the supplier shall arrange and pay for Marine/Transit Insurance, naming the purchaser as beneficiary and initiate and pursue the claims till settlement, in the event of any loss/damage.

2.16.4 The equipment to be supplied will be insured by the supplier against all risks of loss or damage from the date of shipment till such time it is delivered at CSIR-NAL site in case of rupee transaction.

2.16.5 Where delivery is on FOB or FCA basis for the Imported Goods or FOR dispatch Station for Indigenous Goods, the Insurance would be the responsibility of the purchaser.

2.16.6 With a view to ensure that claims on insurance companies, if any, are lodged in time, the bidders' and /or the Indian agent shall be responsible for follow up with their principals for ascertaining the dispatch details and informing the same to the Purchaser and he shall also liaise with the Purchaser to ascertain the arrival of the consignment after clearance so that immediately thereafter in his presence the consignment could be opened and the insurance claim be lodged, if required, without any loss of time. Any delay on the part of the bidder/Indian Agent would be viewed seriously and he shall be directly responsible for any loss sustained by the purchaser in the event of the delay.

2.17 Transportation

2.17.1 Where the Supplier is required under the Contract to deliver the Goods FOB, transport of the Goods, up to and including the point of putting the Goods on board the vessel at the specified port of loading, shall be arranged and paid for by the Supplier, and the cost thereof shall be included in the Contract price. Where the Supplier is required under the Contract to deliver the Goods FCA, transport of the Goods and delivery into the custody of the carrier at the place named by the Purchaser or other agreed point shall be arranged and paid for by the Supplier, and the cost thereof shall be included in the Contract Price.

2.17.2 Where the Supplier is required under the Contract to deliver the Goods CIF or CIP, transport of the Goods to the port of destination or such other named place of

destination in the Purchaser's country, as shall be specified in the Contract, shall be arranged and paid for by the Supplier, and the cost thereof shall be included in the Contract Price.

2.17.3 In the case of supplies from within India, where the Supplier is required under the Contract to transport the Goods to a specified destination in India, defined as the Final Destination, transport to such destination, including insurance and storage, as specified in the Contract, shall be arranged by the Supplier, and the related costs shall be included in the Contract Price.

2.17.4 The clearing of the consignment at Bengaluru Airport shall be done by our authorised Custom House Agent (CHA) for CIP/CIF consignments. The details of CHA will be given in the Purchase Order. The corresponding shipping documents may be forwarded to them accordingly. It is advised to give us and our CHA, a pre-alert before the consignment is dispatched. If there is delay in clearing of the consignment for not giving timely pre-alert then demurrage (Ware house charges) and/or penalty imposed by Indian Customs for late custom clearance, if payable has to be refunded to us by the Supplier/Indian Agent or the same will be deducted from any payment due to Supplier/Indian Agent against this order or any other Purchase Order.

2.18 Incidental Services

2.18.1 The supplier may be required to provide any or all of the services, including training, if any, specified in chapter - 4.

2.19 Spare Parts

2.19.1 The Supplier shall be required to provide any or all of the following materials, notifications, and information pertaining to spare parts manufactured or distributed by the Supplier:

(a)	Such spare parts as the Purchaser may elect to purchase from the Supplier, providing that this election shall not relieve the Supplier of any warranty obligations under the Contract; and	
(b)	In the event of termination of production of the spare parts:	
	(i)	Advance notification to the Purchaser of the pending termination, in sufficient time to permit the Purchaser to procure needed requirements; and
	(ii)	Following such termination, furnishing at no cost to the Purchaser, the blueprints, drawings and specifications of the spare parts, if requested.

2.20 Warranty

2.20.1 The Supplier warrants that all the Goods are new, unused, and of the most recent or current models, and that they incorporate all recent improvements in design and materials, unless provided otherwise in the Contract.

2.20.2 The Supplier further warrants that the Goods shall be free from defects arising from any act or omission of the Supplier or arising from design, materials, and workmanship, under normal use in the conditions prevailing in India.

2.20.3 Unless otherwise specified in the SCC, the warranty shall remain valid for 12 (twelve) months after the Goods, or any portion thereof as the case may be, have been delivered to and accepted at the final destination indicated in the SCC, or for 18 (eighteen) months after the date of shipment from the port or place of loading in the country of origin, whichever period concludes earlier.

2.20.4 The warranty on the associated software should cover providing of upgraded version(s), if any, released during the warranty period at free of cost.

2.20.5 The bidder shall assure the supply of spare parts after the warranty period for maintenance of the equipment supplied if and when required for a period of 10 (ten) years from the date of supply of equipment on payment on approved price list basis.

2.20.6 The equipment must be supported by a Service Centre manned by the principal vendor's technical support engineers. The support through this Centre must be available 24 hours in a day, seven days a week and 365 days a year. Also it should be possible to contact the Principal's vendor support Centre on a toll free number/web/mail.

2.20.7 An undertaking from the manufacturer is required in this regard stating that they would facilitate the Bidder, Service provider on regular basis with technology/product updates and extend support for the warranty as well.

2.20.8 Supplier will have to arrange for all the testing equipment and tools required for installation, testing and maintenance etc.

2.20.9 The Principal Supplier must have a local logistics support by maintaining a local spares depot in the country of deployment of the equipment. This is to ensure immediate delivery of spares parts from Principal Supplier of equipment to its channel partner/system integrator.

2.20.10 Details of onsite warranty, Name of Agency that shall maintain during warranty and undertake Annual Maintenance Contract/Comprehensive Service Maintenance Contract beyond warranty shall be given in the offer. In case of foreign quote, the name of Indian Agent who shall maintain during warranty and AMC beyond warranty shall be given in the Technical Offer.

2.20.11 The Purchaser shall give notice to the Supplier stating the nature of any such defects together with all available evidence thereof, promptly following the discovery thereof. The Purchaser shall afford all the reasonable opportunity for the Supplier to inspect such defects.

2.20.12 Upon receipt of such notice, the Supplier shall, within a reasonable period of time, expeditiously repair or replace the defective Goods or parts thereof, at no cost to the Purchaser.

2.20.13 If having been notified, the Supplier fails to remedy the defect within a reasonable period of time; the Purchaser may proceed to take within a reasonable period such remedial action as may be necessary, at the Supplier's risk and expense and without prejudice to any other rights which the Purchaser may have against the Supplier under the Contract.

2.20.14 In case the Equipment/System remains non-operational or performs below the desired level for more than 1 (one) week after intimation of the fault in the Equipment/System then Warranty period shall be extended for further period for which Equipment/System remained non-operational or performed below the desired level, without prejudice to any other terms and conditions of the Contract. The defects, if any, during the warranty period are to be rectified at free of cost by arranging free replacement wherever necessary.

2.20.15 In case of any replacement during the warranty period the same shall be made at free of cost i.e. DDP for import replacement and/or free delivery to CSIR-NAL, for indigenous replacement. All the duties/taxes relating to these replacements have to be borne by the supplier. Dispatch details of such warranty replacements have to be informed in advance to enable us to provide documents for custom clearance.

2.20.16 Any replacements during the warranty period should be at free of cost. If the defective item(s) has to be sent back to the Principal Supplier, for such replacements/returns to the Principal Supplier/Indian Agent has to bear the documentation charges. If the cost of replacement is upto Rs.5 lakhs then the documentation charges will be Rs. 5,000/- and above Rs. 5 lakhs it is Rs. 10,000/-. Such charges have to be paid in favour of The Director, CSIR-NAL, Bengaluru. These charges are only for documentation. Any charges regarding packing, forwarding, freight, insurance, etc. should be borne by the Principal Supplier/Indian Agent for returning of defective item(s). In other words, any warranty replacement has to be done immediately/within a one week without expecting CSIR-NAL to export the defective items to Principal Supplier for repair/replacements. All charges involved for re-export of defective items have to be borne by Principal Supplier/Indian Agent.

2.21 Terms of Payment

2.21.1 The method and conditions of payment to be made to the Supplier under this Contract shall be as specified in the SCC.

2.21.2 The Supplier's request for payment shall be made to the Purchaser in writing, accompanied by an invoice describing, as appropriate, the Goods delivered and the Services performed, and by documents, submitted pursuant to Delivery and document Clause of the GCC and upon fulfilment of other obligations stipulated in the contract.

2.21.3 Payments shall be made promptly by the Purchaser but in no case later than 30 (thirty) days after submission of the invoice or claim by the Supplier. While claiming the payment, the supplier should certify in the bill/invoice that the payment being claimed strictly in terms of the contract and all obligations on the part of the supplier for claiming the payment have been fulfilled as required under the contract.

Mandatory fields in Tax Invoice and Receipt Vouchers	
Invoice Number and Date	Name, address and GSTIN of the supplier
Shipping and Billing Address	Customer Name & GSTIN [CSIR- NAL] Bank Details
HSN Code/SAC Code	Place of Supply
Taxable value and discounts	Item details i.e. description, quantity (number), unit and the total value
Signature of the Supplier	Rate and amount of taxes i.e. CGST/SGST/IGST

2.21.4 Kindly, note CSIR-NAL GST No.29AAATC2716R1ZB and, the Bidders are required to furnish their GST No. in the Invoice failing which, CSIR-NAL will not be able to make timely payment.

2.21.5 Payment shall be made in currency as indicated in the contract.

2.21.6 Advance payment will be paid in exceptional cases only against equivalent amount of Bank Guarantee or Stand by Letter of credit valid till acceptance of all ordered goods and services. Advance payment shall not exceed 30 (thirty) per cent and 40 (forty) per cent of Purchase Order value to a private enterprise and Government organisation respectively.

2.22 Change Orders and Contract Amendments

2.22.1 The Purchaser may at any time, by written order given to the Supplier pursuant to Clause on Notices of the GCC make changes within the general scope of the Contract in any one or more of the following:

(a)	Increase or decrease in the quantity required, exercise of quantity opinion clause;
(b)	Changes in schedule of deliveries and terms of delivery;
(c)	The changes in inspection arrangements;
(d)	Changes in terms of payments and statutory levies;
(e)	Changes due to any other situation not anticipated;

2.22.2 If any such change causes an increase or decrease in the cost of, or the time required for, the Supplier's performance of any provisions under the Contract, an equitable adjustment shall be made in the Contract Price or delivery schedule, or both, and the Contract shall accordingly be amended. Any claims by the Supplier for adjustment under this clause must be ascertained within 15 (fifteen) days from the date of the Supplier's receipt of the Purchaser's change order.

2.22.3 No variation or modification in the terms of the contract shall be made except by written amendment signed by the parties.

2.23 Assignment

2.23.1 The Supplier shall not assign, in whole or in part, its obligations to perform under the Contract, except with the Purchaser's prior written consent.

2.24 Subcontracts

2.24.1 The Supplier shall notify the Purchaser in writing of all subcontracts awarded under this Contract if not already specified in the bid. Such notification, in the original bid or later, shall not relieve the Supplier from any liability or duties or obligation under the contract.

2.25 Extension of time.

2.25.1 Delivery of the Goods and performance of the Services shall be made by the Supplier in accordance with the time schedule specified by the Purchaser.

2.25.2 If at any time during performance of the Contract, the Supplier or its sub-contractor(s) should encounter conditions impeding timely delivery of the Goods and performance of Services, the Supplier shall promptly notify the Purchaser in writing of the fact of the delay, its likely duration and its cause(s). As soon as practicable after receipt of the Supplier's notice, the Purchaser shall evaluate the situation and may, at its discretion, extend the supplier's time for performance with or without liquidated damages, in which case the extension shall be ratified by the parties by amendment of the Contract.

2.25.3 Except as provided under the Force Majeure clause of the GCC, a delay by the Supplier in the performance of its delivery obligations shall render the Supplier liable to the imposition of liquidated damages pursuant to liquidated damages Clause of the GCC unless an extension of time is agreed upon pursuant to above clause without the application of penalty clause.

2.26 Penalty Clause/Liquidated Damages

2.26.1 Subject to GCC Clause on Force Majeure, if the Supplier fails to deliver any or all of the Goods or to perform the Services within the period(s) specified in the Contract, the Purchaser shall, without prejudice to its other remedies under the Contract, deduct from the Contract Price, as penalty, a sum equivalent to the percentage specified in SCC of the delivered price of the delayed Goods or unperformed Services or contract value in case the delivered price of the delayed goods or unperformed services cannot be ascertained from the contract, for each week or part thereof of delay until actual delivery or performance, up to a maximum deduction of the Percentage specified in SCC. Once the maximum is reached, the Purchaser may consider termination of the Contract pursuant to GCC Clause on Termination for Default. The SCC shall also indicate the basis for ascertaining the value on which the penalty shall be applicable.

2.27 Termination for Default

2.27.1 The Purchaser may, without prejudice to any other remedy for breach of contract, by written notice of default sent to the Supplier, terminate the Contract in whole or in part

(a)	If the Supplier fails to deliver any or all of the Goods within the period(s) specified in the contract, or within any extension thereof granted by the Purchaser pursuant to GCC Clause on Extension of Time; or
(b)	If the Supplier fails to perform any other obligation(s) under the Contract.
(c)	If the Supplier, in the judgment of the Purchaser has engaged in corrupt or fraudulent or collusive or coercive practices etc., as defined in GCC Clause and ITB Clause on code of integrity in competing for or in executing the Contract.

2.27.2 In the event the purchaser terminates the contract in whole or in part, he may take recourse to any one or more of the following action:

(a)	The Performance Security is to be forfeited;
(b)	The purchaser may procure, upon such terms and in such manner as it deems appropriate, stores similar to those undelivered, and the supplier shall be liable for all available actions against it in terms of the contract.
(c)	However, the supplier shall continue to perform the contract to the extent not terminated.

2.28 Force Majeure

2.28.1 Notwithstanding the provisions of GCC Clauses relating to extension of time, Liquidated damages and Termination for Default the Supplier shall not be liable for forfeiture of its performance security, liquidated damages or termination for default, if and to the extent that, its delay in performance or other failure to perform its obligations under the Contract is the result of an event of Force Majeure.

2.28.2 For purposes of this Clause, "Force Majeure", means an event or situation beyond the control of the Supplier that is not foreseeable, is unavoidable, and its origin is not due to negligence or lack of care on the part of the Supplier. Such events may include, but not be limited to, acts of the Purchaser in its sovereign capacity, wars or revolutions, fires, floods, epidemics, quarantine restrictions and freight embargoes.

2.28.3 If a Force Majeure situation arises, the Supplier shall promptly notify the Purchaser in writing of such conditions and the cause thereof within 21 (twenty one) days of its occurrence. Unless otherwise directed by the Purchaser in writing, the Supplier shall continue to perform its obligations under the Contract as far as reasonably practical, and shall seek all reasonable alternative means for performance not prevented by the Force Majeure event.

2.28.4 If the performance in whole or in part or any obligations under the contract is prevented or delayed by any reason of Force Majeure for a period exceeding 60 (sixty) days, either party may at its option terminate the contract without any financial repercussions on either side.

2.29 Termination for Insolvency

2.29.1 The Purchaser may at any time terminate the Contract by giving written notice to the Supplier, if the Supplier becomes bankrupt or otherwise insolvent. In this event, termination will be without compensation to the Supplier, provided that such termination will not prejudice or affect any right of action or remedy, which has accrued or will accrue thereafter to the Purchaser.

2.30 Termination for Convenience

2.30.1 The Purchaser, by written notice sent to the Supplier, may terminate the Contract, in whole or in part, at any time. The notice of termination shall specify that termination is for the Purchaser's convenience, the extent to which performance of the Supplier under the Contract is terminated, and the date upon which such termination becomes effective.

2.30.2 The Goods that are complete and ready for shipment within 30 (thirty) days after the Supplier's receipt of notice of termination shall be accepted by the Purchaser at the Contract terms and prices. For the remaining Goods, the Purchaser may elect:

(a)	To have any portion completed and delivered at the Contract terms and prices; and/or
(b)	To cancel the remainder and pay to the Supplier an agreed amount for partially completed Goods and for materials and parts previously procured by the Supplier.

2.31 Settlement of Disputes

2.31.1 The Purchaser and the supplier shall make every effort to resolve amicably by direct informal negotiation any disagreement or dispute arising between them under or in connection with the Contract.

2.31.2 In case after the lapse of 21 (twenty-one) days, the parties have failed to resolve their dispute or difference by such mutual consultation, either the Purchaser or the Supplier may give notice to the other party of its intention to commence arbitration, as hereinafter provided, as to the matter in dispute, and no arbitration in respect of this matter may be commenced unless such notice is given. Any dispute or difference in respect of which a notice of intention to commence arbitration has been given in accordance with this Clause shall be finally settled by arbitration. Arbitration may be commenced prior to or after delivery of the Goods under the Contract.

2.31.3 The dispute settlement mechanism/arbitration proceedings shall be concluded as under:

(a)	If any dispute or difference arises between the parties hereto as to the construction, interpretation, effect and implication of any provision of this agreement including the rights or liabilities or any claim or demand of any party against other or with regard to any other matter under these presents but excluding any matters, decisions or determination of which is expressly provided for in this Agreement, such disputes or differences shall be referred to an Arbitral Bench consisting of three Arbitrators, one each to be appointed by each party and the two Arbitrators shall appoint a third Arbitrator who shall be the presiding Arbitrator. A reference to the Arbitration under this Clause shall be deemed to be submission within the meaning of the Arbitration and Conciliation Act, 1996, and the rules framed thereunder for the time being in force. Each party shall bear and pay its own cost of the arbitration proceedings unless the Arbitrators otherwise decides in the Award. The venue of arbitration should be the place from where the Contract has been issued.
(b)	In the case of a dispute between the purchaser and a Foreign Supplier, the dispute shall be settled by arbitration in accordance with provision of sub- clause (a) above. But if this is not acceptable to the supplier then the dispute shall be settled in accordance with provisions of UNCITRAL (United Nations Commission on International Trade Law) Arbitration Rules.

2.31.4 The venue of the arbitration shall be the place from where the purchase order or contract is issued.

2.31.5 Notwithstanding, any reference to arbitration herein,

(a)	The parties shall continue to perform their respective obligations under the Contract unless they otherwise agree; and
(b)	the Purchaser shall pay the Supplier any monies due the Supplier.

2.32 Governing Language

2.32.1 The contract shall be written in English language which shall govern its interpretation. All correspondence and other documents pertaining to the Contract, which are exchanged by the parties, shall be written in the English language only.

2.33 Applicable Law/Jurisdiction

2.33.1 The Contract shall be interpreted in accordance with the laws of the Union of India and all disputes shall be subject to place of jurisdiction as specified in SCC.

2.34 Notices

2.34.1 Any notice given by one party to the other pursuant to this contract/order shall be sent to the other party in writing or by cable, telex, FAX, e-mail or and confirmed in writing to the other party's address specified in the SCC.

2.34.2 A notice shall be effective when delivered or on the notice's effective date, whichever is later.

2.35 Taxes and Duties

2.35.1 For goods manufactured outside India, the Supplier shall be entirely responsible for all taxes, stamp duties, license fees, and other such levies imposed outside India.

2.35.2 For goods manufactured within India, the Supplier shall be entirely responsible for all taxes, duties, license fees, etc., incurred till its final manufacture/production.

2.35.3 If any tax exemptions, reductions, allowances or privileges may be available to the Supplier in India, the Purchaser shall make its best efforts to enable the Supplier to benefit from any such tax savings to the maximum allowable extent without any commitment.

2.35.4 a) All payments due under the contract shall be paid after deduction of statutory levies (at source) (like TDS, IT, TCS etc.) wherever applicable. In this regard, GoI notification may be referred to before submitting quote on their own interest. Statutory deductions will be done accordingly at the time of payment.

b) If the supplier have not filed Income Tax returns for the latest financial year, TDS/TCS is applicable as per Income Tax Act.

c) Withholding Taxes are applicable on foreign payments such as but not limited to Royalty, Fees for Technical Services etc.,

2.35.5 Customs Duty:

a) The CSIR-NAL is a Public Funded Research Institution under Department of Scientific & Industrial Research and concessional Custom Duty at the rate of 5.50 (five point five zero) per cent is applicable for the goods purchased for research purpose vide Government of India Notification No.51/96-Customs, dated 23-July- 1996.

b) The Certificates is issued without any commitment by CSIR-NAL. Hence, the supplier should ensure its applicability for their own interest.

2.35.6 Goods and Service Tax

(a) CSIR-NAL is a Public Funded Research Institution under Department of Scientific & Industrial Research and Concessional GST is not applicable for the goods purchased for Research Purpose. Hence, GST shall be applicable at the rate of 18 (eighteen) per cent for goods and services supplied to CSIR Institutes.

2.36 Right to use Defective Goods

2.36.1 If after delivery, acceptance and installation and within the guarantee and warranty period, the operation or use of the goods proves to be unsatisfactory, the Purchaser shall have the right to continue to operate or use such goods until rectifications of defects, errors or omissions by repair or by partial or complete replacement is made without interfering with the Purchaser's operation.

2.37 Protection against Damage

2.37.1 The system shall not be prone to damage during power failures and trip outs. The normal voltage and frequency conditions available at site as under:

(a)	Voltage 230 volts – Single phase/415 V 3 phase (+/- 10%)
(b)	Frequency 50 Hz.

2.38 Site preparation and installation

2.38.1 The Purchaser is solely responsible for the construction of the equipment sites in compliance with the technical and environmental specifications defined by the Supplier. The Purchaser will designate the installation sites before the scheduled installation date to allow the Supplier to perform a site inspection to verify the appropriateness of the sites before the installation of the equipment, if required. The supplier shall inform the purchaser about the site preparation, if any, needed for installation, of the goods at the purchaser's site immediately after notification of award/contract.

2.39 Import and Export Licenses

2.39.1 If the ordered materials are covered under restricted category of EXIM policy in India the Bidder/Agent may intimate such information for obtaining necessary, license in India.

2.39.2 If the ordered equipment is subject to Bidder procuring an export license from the designated government agency/country from where the goods are shipped/sold, the Vendor/Bidder has to mention the name, address of the government agency/authority. The Bidder must also mention the time period within which the license will be granted in normal course.

2.40 Risk Purchase Clause

2.40.1 If the supplier fails to deliver the goods within the maximum delivery period specified in the contract or purchase order, the purchaser may procure, upon such terms and in such a manner as it deems appropriate, Goods or Services similar to those undelivered and the Supplier shall be liable to the purchaser for any excess costs incurred for such similar goods or services.

2.41 Option Clause/Purchaser's right to vary quantities

2.41.1 The Purchaser reserves the right to increase or decrease the quantity of the required goods up to 25 (twenty-five) per cent at any time, till final delivery date (or the extended delivery date of the contract), by giving reasonable notice even though the quantity ordered initially has been supplied in full before the last date of the delivery period (or the extended delivery period).

2.42 Integrity Pact

2.42.1 As per the directives of the Central Vigilance Commission (CVC) all organisations including CSIR laboratories/institutes have to adopt an Integrity Pact (IP) to ensure transparency, equity and competitiveness in major Public procurement having procurement value above Rs.3 (three) Crore. The integrity pact envisages an agreement between the prospective bidders with the buyer committing the persons/officials of both the parties with an aim not to exercise any corrupt influence on any aspect of the contract. Only those bidders, who are willing to enter in to such an integrity pact with the Purchaser, would be competent to participate in the bidding.

2.42.2 The SCC shall specify whether there is a need to enter into a separate Integrity Pact or not.

2.42.3 The names and contact details of the Independent External Monitors (IEM) on the event of the need of IP is as detailed in the SCC.

Integrity Pact – The integrity pact to be signed on Company's Letter head, wherever applicable. However, efforts must be made to realise the objectives and spirits thereof.	
The name and contact details of the IEMs are as under:	
Shri. Jagadip Narayan Singh, IAS (Retd.), C-54, Bharatendu Harishchandra Marg, Anand Vihar, Delhi 110 092. Mob: Email: jagadipsingh@yahoo.com	Shri. Arun Kumar Gupta, Ex-CMD, SCI, 68B, Nandavan CHS Sector 17, Nerul, Navi Mumbai 400 706. Mob: Email: guptaarun55@rediffmail.com

2.43 Order Acceptance

2.43.1 The successful bidder should submit Order acceptance within 14 (fourteen) days from the date of issue of order/signing of contract, failing which it shall be presumed that the Bidder is not interested and his bid security is liable to be forfeited pursuant to ITB clause 1.16.11.

2.43.2 The order confirmation must be received within 14 (fourteen) days. However, the Purchaser has the powers to extend the time frame for submission of order confirmation beyond the original date. Even after extension of time, if the order confirmation is not received, the contract is liable to be cancelled.

CHAPTER - 2

SPECIAL CONDITIONS OF CONTRACT (SCC)

The following Special Conditions of Contract (SCC) shall supplement and/or amend the General Conditions of Contract (GCC). Whenever there is a conflict, the provisions herein shall prevail over those in the GCC.

Sl. No.	GCC Clause Ref	Condition
1	GCC 2.1.1(l)	Purchaser is: The Director CSIR- National Aerospace Laboratories, HAL Airport Road, Kodihalli Bengaluru – 560 017 Karnataka-India Tel #: 080 2508 6040/ 6041 Email : purchasek.nal@csir.res.in Bill to address is same as above
2	GCC 2.1.1(m)	The Final Destination is: CSIR- National Aerospace Laboratories, HAL Airport Road, Kodihalli Bengaluru – 560 017 Karnataka-India Tel #: 080 2508 6040/ 6041 Email : purchasek.nal@csir.res.in
3	GCC 2.12.1	Performance Security The amount of the Performance Bank Guarantee shall be 3 (three) per cent of the contract value to be submitted within 21 (twenty one) days from the date of PO valid up to 60 (sixty) days after the date of completion of performance obligations including warranty obligations.
4	GCC 2.15.3	Delivery – Mode of Transportation/Shipment
		a) In case of supplies from within India, the mode of transportation shall be by Road/Rail/etc.,
		b) **DELIVERY TERM: CSIR-NAL, Delivery**
5	GCC 2.16.1	Insurance **Within India** The Insurance shall be for an amount equal to 110 per cent of the invoice value of the contract from "warehouse to warehouse (final destination)", on "all risk basis", including strikes, riots and civil commotion.
6	GCC 2.20.3	The period of validity of the Warranty shall be The Warranty details are as per Chapter - 4
7	GCC 2.21.1	Terms of Payment
		The method and conditions of payment to be made to the Supplier under this Contract shall be as follows:
		Payment for Goods and Services supplied from India
		The payment shall be made in Indian Rupees, as follows:
		(a) 100 per cent after Supply, Installation, Commissioning, Training and Acceptance, subject to validity of Performance Security to cover warranty obligations.

		(b)	~~100 per cent through Inland Letter of Credit opened in favour of supplier through CSIR-NAL Bank i.e., State Bank of India, will be decided, as the case may be.~~
		(c)	E-Payment: All payments, CSIR-NAL prefers to make Electronic Transfers (RTGS) through State Bank of India, NAL Branch, Bengaluru.
		(d)	All payments due under the Contract shall be paid after deduction of statutory levies at source (like TDS, Income Tax, TCS etc.), wherever applicable.
8	GCC 2.26.1	Liquidated Damages (LD)/Penalty	
		(a)	As time is the essence of the contract, Delivery period mentioned in the Purchase Order should be strictly adhered to, otherwise will have to forfeit the EMD/PS and also LD clause will be applicable / enforced.
		(b)	If the Supplier fails to Supply, Install and Commission the system as per the specifications mentioned in the order within the due date, the Supplier is liable to pay LD/penalty of 0.5 (point five) per cent of order value per week of delay subject to the maximum of 10 per cent beyond the due date. Such money will be deducted from any amount due or which may become due to the Supplier.
		(c)	CSIR-NAL reserves the right to cancel the Purchase Order in case the delay in supply is more than 10 (ten) weeks. Penalties, if any, will be deducted from the EMD/PS.
		(d)	The maximum amount of penalty shall be 10 per cent.
		(e)	The LD/Penalty shall be levied on the delivered price of the delayed Goods or unperformed Services or Contract Value.
9	GCC 2.33.1	Applicable Law/Jurisdiction The place of jurisdiction is Bengaluru, India.	
10	GCC 2.34.1	For notices, the Purchaser's address is The Director Attention: The Sr. Controller of Stores & Purchase CSIR- National Aerospace Laboratories HAL Airport Road, Kodihalli Bengaluru – 560 017 Karnataka-India Tel #: 080 2508 6040/ 6041 Email : **purchasek.nal@csir.res.in**	
11	GCC 2.42.1	Integrity Pact – **The integrity pact not to be signed**. However, efforts must be made to realise the objectives and spirits thereof.	
12	GCC 2.42.2	The name and contact details of the IEMs are as under:	
		Shri. Jagadip Narayan Singh, IAS (Retd.), C-54, Bharatendu Harishchandra Marg, Anand Vihar, Delhi 110 092. Mob: Email: jagadipsingh@yahoo.com	Shri. Arun Kumar Gupta, Ex-CMD, SCI, 68B, Nandavan CHS Sector 17, Nerul, Navi Mumbai 400 706. Mob: Email:guptaarun55@rediffmail.com

CHAPTER - 3
(To be filled by the bidder and to be enclosed with the Technical Bid)

SCHEDULE OF REQUIREMENT

The Schedule of Requirement must clearly specify the time frame required (Schedule) for delivery of goods and services to be completed by the bidder (in reference to Scope of Supply given in Clause-4.2 of Chapter-4) if the Contract is awarded for the offer/proposal submitted by the bidder in response to this Tender.

A) Delivery Schedule:

Sl. No.	Brief Description of Goods and Services	Unit	Quantity	Delivery Schedule

B) Period of delivery shall start from: ____

C) Term of Delivery/Delivery Term (named port of shipment or named place of delivery:

Goods from Abroad	
Goods from India	

D) Scope of Supply:

Time frame required for conducting installation, commissioning of the equipment, acceptance test, training, etc., after the arrival of consignment or before dispatch of equipment:

Sl. No.	Activity	Time Frame
1	Site Preparation (if required)	
2	Installation & Commissioning	
3	Acceptance Test	
4	Training - (Location, No. of person(s), period of training, nature of training)	
5		

Place:___ Signature of the Bidder:

Date: ___

Notes for Bidders:

(1)	The delivery schedule shall clearly indicate the time period within which the successful bidder must deliver the consignment in full from the date of establishment of Letter of Credit or from the date of contract or from the date of advance payment etc., It should also indicate separately the time period desired for installation and commissioning of the equipment after arrival of the consignment at the premises of the Purchaser.
(2)	The date or period for delivery should be carefully specified, taking into account the implications of delivery terms stipulated in the Instructions to Bidders' pursuant to the Incoterms rules (i.e., Ex Works, or CIF, CIP, FOB, FCA terms - that "delivery", takes place when goods are delivered to the carriers), and the date prescribed herein from which the delivery obligations start (i.e., notice of award, contract signature, opening or confirmation of the letter of credit, date of releasing advance payment etc.).

CHAPTER 4

Specifications and Allied Technical Details for Metallic Tools
SARAS MK II Rudder Spar, Horn, Rib Tools and Spacers for Layup & Curing Process

4.1 End Use

Metal tools will be used to manufacture composite Rudder sub-assemblies (IS, AFT & Trim tab box sub-assemblies) other detail parts for SARAS Mk-II aircraft under autoclave moulding conditions of 190°C with external pressure of 7 bar and full vacuum.

4.2 Detailed Specifications

Fabrication & Supply of metallic tools as per the following supplied drawings and CAD models listed below in Table 1 for Module 1 and Table 2 for Module 2 metallic tools. 3D CAD models in STP/IGS format will be provided to the successful bidder along with Purchase Order. Bidder has to quote for each line item separately and **L1 will be based on the cost of each module.**

4.2.1. Scope of Work

Fabrication & supply of metallic tools/moulds manufactured using CNC machining process as per supplied 3D CAD model and 2D drawings for items listed below in Table 1 & Table 2 and requirements specified in this RFQ document.

4.2.2 Input data and Requirements for Mould Manufacturing and Mould Specifications

3D CAD model of the tool/mould will be supplied by CSIR-NAL in CATIA V5/ any other neutral format and 2D drawings in PDF format to the successful bidder for manufacturing of the following items mentioned in the Table 1 & Table 2.

Module 1:

Table 1: Fabrication and supply of Rudder Horn, End ribs and Rear spar tools using SA 516 Gr 70 Steel materials

SL NO	TOOL DESCRIPTION	TOOL NUMBER	Qty
1	TOOL FOR NOSE RIB #13B	25-A-T-55-40-100-029-000	01
2	TOOL ASSEMBLY FOR HORN SKIN LH AND RH	25-A-T-55-40-350-001-000	01
3	TOOL FOR HORN TIP CAP	25-A-T-55-40-350-002-000	01
4	TOOL FOR HORN TOP SKIN	25-A-T-55-40-350-003-000	01
5	TOOL FOR HORN TOP HINGE ACCESS PANEL	25-A-T-55-40-350-005-000	01
6	TOOL FOR HORN ACCESS COVER	25-A-T-55-40-360-001-000	01
7	TOOL ASSEMBLY FOR AUX SPAR #1 (HORN TIP)	25-A-T-55-40-350-010-000	01
8	TOOL ASSEMBLY FOR HORN RIB #15	25-A-T-55-40-350-017-000	01
9	TOOL ASSEMBLY FOR HORN RIB #16	25-A-T-55-40-350-018-000	01
10	TOOL FOR AFT RIB #8C	25-A-T-55-40-300-006-000	01
11	CAUL PLATE MASTER FOR AFT RIB #8C	25-A-M-55-40-300-006-000	01
12	BASE PLATE END RIB CURING TOOLS	25-A-T-55-40-300-020-000	01
13	TOOL FOR TT ROOT RIB (STA #1)	25-A-T-55-40-400-001-000	01

14	CAUL PLATE MASTER FOR TT ROOT RIB (STA #1)	25-A-M-55-40-400-001-000	01
15	TOOL FOR TT TIP RIB (STA #8B)	25-A-T-55-40-400-002-000	01
16	CAUL PLATE MASTER FOR TT TIP RIB (STA #8B)	25-A-M-55-40-400-002-000	01
17	TOOL ASSEMBLY FOR IS BOX ACCESS COVER FOR TT ACTUATOR ASSY (STA#3 TO STA#5)	25-A-T-55-40-200-001-000	01
18	TOOL FOR TRAILING EDGE BLOCK AFT BOX, TRIM TAB AND HORN SKIN	25-A-T-55-40-305-016-000	01

Module 2:

Table 2: Fabrication and supply of Rudder rib layup tools and curing cores using AL.6082 / HE 30 aluminum alloy materials

SL NO	TOOL DESCRIPTION	TOOL NUMBER	Qty
1	TOOL FOR NOSE SPLICE PLATE STA#11 TO STA#13B LH AND RH	25-A-T-55-40-200-030-000	01
2	TOOL FOR AFT RIB PLUG, HORN RIB PLUG AND TRIM TAB RIB PLUG	25-A-T-55-40-305-017-000	01
3	TOOL FOR AFT BOX CLIPS STA #11,12,13,14 & TT NOSE CLIP (STA#1)	25-A-T-55-40-300-012-000	01
4	TOOL FOR SHIM STA#8C LH & RH	25-A-T-55-40-300-013-000	01
5	LAYUP TOOL FOR HORN TIP CAP	25-A-C-55-40-350-002-000	01
6	LAYUP TOOL HORN TOP SKIN	25-A-C-55-40-350-003-000	01
7	LAYUP TOOL FOR HORN ACCESS COVER	25-A-C-55-40-360-001-000	01
8	LAYUP TOOL FOR AFT RIB #8C	25-A-C-55-40-300-006-000	01
9	LAYUP TOOL FOR TT ROOT RIB (STA #1)	25-A-C-55-40-400-001-000	01
10	LAYUP TOOL FOR TT TIP RIB (STA #8B)	25-A-C-55-40-400-002-000	01
11	TOOL FOR CLIPS AND SPLICE PLATE (NOSE BOX ASSY, AFT BOX ASSY, HORN ASSY & TRIM TAB ASSY)	25-A-T-55-40-100-031-000	01
12	TOOL ASSEMBLY FOR REAR SPAR	25-A-T-55-40-205-020-000	01
13	PRESSURE PAD CASTING TOOL FOR REAR SPAR	25-A-M-55-40-205-020-000	01
14	SPACER (AFT RIB #8C - AFT RIB #9)	25-A-C-55-40-305-006-000	01
15	TOOL ASSEMBLY FOR AFT RIB #9 ROOT & TIP	25-A-T-55-40-305-006-000	01
16	SPACER (AFT RIB #9 - AFT RIB #10)	25-A-C-55-40-305-007-000	01
17	TOOL ASSEMBLY FOR AFT RIB #10 ROOT & TIP	25-A-T-55-40-305-007-000	01
18	SPACER (AFT RIB #10 - AFT RIB #11)	25-A-C-55-40-305-008-000	01
19	TOOL ASSEMBLY FOR AFT RIB #11 ROOT & TIP	25-A-T-55-40-305-008-000	01
20	SPACER (AFT RIB #11 - AFT RIB #12)	25-A-C-55-40-305-009-000	01
21	TOOL ASSEMBLY FOR AFT RIB #12 ROOT & TIP	25-A-T-55-40-305-009-000	01
22	SPACER (AFT RIB #12 - AFT RIB #13)	25-A-C-55-40-305-010-000	01

23	TOOL ASSEMBLY FOR AFT RIB #13 ROOT & TIP	25-A-T-55-40-305-010-000	01
24	SPACER (AFT RIB #13 - AFT RIB #14)	25-A-C-55-40-305-011-000	01
25	TOOL ASSEMBLY FOR AFT RIB #14 ROOT & TIP	25-A-T-55-40-305-011-000	01
26	SPACER (AFT RIB #14 -MOULD TIP END)	25-A-C-55-40-305-017-000	01
27	SPACER (MOULD ROOT END - TT AFT RIB #2)	25-A-C-55-40-435-006-000	01
28	TOOL ASSEMBLY FOR TT AFT RIB #2 ROOT & TIP	25-A-T-55-40-435-006-000	01
29	SPACER (TT AFT RIB #2 - TT AFT RIB #3A)	25-A-C-55-40-435-007-000	01
30	TOOL ASSEMBLY FOR TT AFT RIB #3A ROOT & TIP	25-A-T-55-40-435-007-000	01
31	SPACER (TT AFT RIB #3A - TT AFT RIB #5)	25-A-C-55-40-435-008-000	01
32	TOOL ASSEMBLY FOR TT AFT RIB #5 ROOT & TIP	25-A-T-55-40-435-008-000	01
33	SPACER (TT AFT RIB #5 - TT AFT RIB #6)	25-A-C-55-40-435-009-000	01
34	TOOL ASSEMBLY FOR TT AFT RIB #6 ROOT & TIP	25-A-T-55-40-435-009-000	01
35	SPACER (TT AFT RIB #6 - TT AFT RIB #7)	25-A-C-55-40-435-010-000	01
36	TOOL ASSEMBLY FOR TT AFT RIB #7 ROOT & TIP	25-A-T-55-40-435-010-000	01
37	SPACER (TT AFT RIB #7 - TT AFT RIB #8)	25-A-C-55-40-435-011-000	01
38	TOOL ASSEMBLY FOR TT AFT RIB #8 ROOT & TIP	25-A-T-55-40-435-011-000	01
39	SPACER (TT AFT RIB #8 - TT TIP RIB #8B)	25-A-C-55-40-435-017-000	01

4.2.3. General instructions

i. Drawings and 3D CATIA V5 CAD models listed above will be supplied by CSIR-NAL for tool fabrication.

ii. Tool Material and build quality should meet the drawings requirements.

iii. Tolerance on the tool thickness should be as per respective drawing.

iv. All machined surfaces/ planes should be hard chrome/electroless nickel finish in case of steel tools and hard anodization in case of Aluminium alloy tools. Other area for corrosion resistance to be painted with high temperature aluminium paint to withstand operating temperature of 250˚C. (Wherever applicable) (The thickness of the hard chrome coating /Anodize Aluminium may be 30 to 40 microns.)

v. Contour and reference planes should be machined to 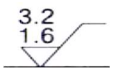

surface finish.

vi. Contour tolerance for the individual tool surface should be within ±0.3 mm with respect to the tooling holes as per drawing.

vii. The tool contour inspection should be carried out w.r.t tooling holes at every 50 mm grid location (maximum) along length and width. Closer readings to be taken on need basis / Laser scanning report for the tool surface.

viii. Part boundary marking-grooves should be done as called in the Model/drawings. The tolerance on the tool groove boundary is ±1.0 mm.

ix. Vendor should accommodate 10-15% modification in tool design and fabrication (if required at the time of PO placement)

4.2.4 Acceptance Test Plan (ATP)

The acceptance test will be conducted by the Purchaser, their consultant or other such person nominated by the Purchaser at its option after the Tools is received at Purchaser's site in the presence of supplier's representatives. The acceptance will involve trouble free operation. There shall not be any additional charges for carrying out acceptance test. No malfunction, partial or complete failure of any part of the Tools is expected to occur. The Supplier shall maintain necessary log in respect of the result of the test to establish to the entire satisfaction of the Purchaser, the successful completion of the test specified.

On the event of the ordered item failing to pass the acceptance test, a period not exceeding two weeks will be given to rectify the defects and clear the acceptance test, failing which, the Purchaser reserve the right to get the tools replaced by the Supplier at no extra cost to the Purchaser.

Successful conduct and conclusion of the acceptance test for the tools/moulds shall also be the responsibility and at the cost of the Supplier. Acceptance Tests Plan (ATP) at the final destination (CSIR NAL) include the following:

Phase 1 - Pre-Dispatch Inspections:

4.2.4.1 Tool/moulds should meet all the requirements mentioned in the respective drawing/s and the requirements mentioned in this document.

4.2.4.2 Vendor should inspect the metallic tools/ mould items mentioned in Table 1 & 2 as per the drawing and 3D CAD model and 2D drawings. The contour inspection should be done using Laser tracker/CMM in the presence of CSIR-NAL team and inspection report should be submitted to CSIR-NAL. Vendor should meet all specifications as per drawing.

4.2.4.3 After these inspections, CSIR-NAL will give the clearance to ship the metallic mould/tools to CSIR-NAL carryout vacuum integrity (leak test) at CSIR-NAL, no cost to the vendor. However, tool/moulds will be accepted after vacuum integrity test only.

Phase 2- Final Acceptance at CSIR-NAL:

After receiving the metallic tools/ mould at CSIR-NAL, the following inspection/tests will be carried out to accept the mould/tools.

4.2.4.4 Vacuum Integrity Test (Leak test) should be as follows:
The Metallic tools/moulds provided by the vendor will be subjected to the following autoclave cure cycle at CSIR-NAL at no cost to vendor:
Cure Cycle: 180±5°C for 2 hours under full vacuum and 7 Bar of External Pressure as per approved cure process document.

4.2.4.5 After Vacuum Integrity (leak test), the tools will be subjected to laser tracker/CMM

inspection at CSIR-NAL (if required) as per the drawing at no cost to vendor. Also, the visual and dimensional inspection of the tool will be carried out as per drawing by CSIR-NAL at no cost to vendor.

4.2.4.6 If any deviation is found in Vacuum integrity, tool NMG/surface contour and dimensional measurements as per the supplied drawings, these deviations have to be corrected or replaced with new tool by supplier without any additional costs to CSIR-NAL.

4.2.4.7 After the cure, the tool should not have any peeling of surface protection coating, paint and any other visible deterioration. If found, vendor should rectify the tools or replace with new one without any additional cost to CSIR-NAL.

4.2.5 General Conditions

4.2.5.1 CSIR-NAL keeps its rights to perform acceptance inspection/witness of Dimensional checks and contour inspection at the manufacturer's facilities.

4.2.5.2 Whenever vendor is ready to carry out CMM/Laser Tracker inspection of the moulds/tools, vendor shall give at least 10 days' advance notice, including the place and time to CSIR-NAL. CMM/Laser Tracker inspection at vendor's designated place to be arranged by the vendor.

4.2.5.3 CSIR-NAL will bear the cost for the visit of CSIR-NAL team to vendor's place.

4.2.6 Deliverables

Module 1:

Table 3: List of Rudder Horn, End ribs and Rear spar tools to be delivered

SL NO	TOOL DESCRIPTION	TOOL NUMBER	Qty
1	TOOL FOR NOSE RIB #13B	25-A-T-55-40-100-029-000	01
2	TOOL ASSEMBLY FOR HORN SKIN LH AND RH	25-A-T-55-40-350-001-000	01
3	TOOL FOR HORN TIP CAP	25-A-T-55-40-350-002-000	01
4	TOOL FOR HORN TOP SKIN	25-A-T-55-40-350-003-000	01
5	TOOL FOR HORN TOP HINGE ACCESS PANEL	25-A-T-55-40-350-005-000	01
6	TOOL FOR HORN ACCESS COVER	25-A-T-55-40-360-001-000	01
7	TOOL ASSEMBLY FOR AUX SPAR #1 (HORN TIP)	25-A-T-55-40-350-010-000	01
8	TOOL ASSEMBLY FOR HORN RIB #15	25-A-T-55-40-350-017-000	01
9	TOOL ASSEMBLY FOR HORN RIB #16	25-A-T-55-40-350-018-000	01
10	TOOL FOR AFT RIB #8C	25-A-T-55-40-300-006-000	01
11	CAULPLATE MASTER FOR AFT RIB #8C	25-A-M-55-40-300-006-000	01
12	BASE PLATE END RIB CURING TOOLS	25-A-T-55-40-300-020-000	01
13	TOOL FOR TT ROOT RIB (STA #1)	25-A-T-55-40-400-001-000	01
14	CAULPLATE MASTER FOR TT ROOT RIB (STA #1)	25-A-M-55-40-400-001-000	01

15	TOOL FOR TT TIP RIB (STA #8B)	25-A-T-55-40-400-002-000	01
16	CAULPLATE MASTER FOR TT TIP RIB (STA #8B)	25-A-M-55-40-400-002-000	01
17	TOOL ASSEMBLY FOR IS BOX ACCESS COVER FOR TT ACTUATOR ASSY (STA#3 TO STA#5)	25-A-T-55-40-200-001-000	01
18	TOOL FOR TRAILING EDGE BLOCK AFT BOX, TRIM TAB AND HORN SKIN	25-A-T-55-40-305-016-000	01

Note:

1. **Vendor should supply box type movable trolley to store all small tools.**
2. **Vendor should supply individual Polythene covers for remaining all tools.**

Documents/CAD data/Reports:	
1.	Raw Material CoC & Heat treatment / Stress relieve Reports
2.	Surface Finish / Treatment Reports
3.	CMM / Laser Tracker Contour Reports & Dimensional reports
4.	NDT reports of welding ensuring defect free joints.
5.	Any updated tool 3D CAD model and drawings released by vendor. One set of released drawings should be given in print.

Module 2:

Table 4: List of Rudder rib layup tools and curing cores to be delivered

SL NO	TOOL DESCRIPTION	TOOL NUMBER	Qty
1	TOOL FOR NOSE SPLICE PLATE STA#11 TO STA#13B LH AND RH	25-A-T-55-40-200-030-000	01
2	TOOL FOR AFT RIB PLUG, HORN RIB PLUG AND TRIM TAB RIB PLUG	25-A-T-55-40-305-017-000	01
3	TOOL FOR AFT BOX CLIPS STA #11,12,13,14 & TT NOSE CLIP (STA#1)	25-A-T-55-40-300-012-000	01
4	TOOL FOR SHIM STA#8C LH & RH	25-A-T-55-40-300-013-000	01
5	LAYUP TOOL FOR HORN TIP CAP	25-A-C-55-40-350-002-000	01
5	LAYUP TOOL FOR HORN TOP SKIN	25-A-C-55-40-350-003-000	01
7	LAYUP TOOL FOR HORN ACCESS COVER	25-A-C-55-40-360-001-000	01
8	LAYUP TOOL FOR AFT RIB #8C	25-A-C-55-40-300-006-000	01
9	LAYUP TOOL FOR TT ROOT RIB (STA #1)	25-A-C-55-40-400-001-000	01
10	LAYUP TOOL FOR TT TIP RIB (STA #8B)	25-A-C-55-40-400-002-000	01
11	TOOL FOR CLIPS AND SPLICE PLATE (NOSE BOX ASSY, AFT BOX ASSY, HORN ASSY & TRIM TAB ASSY)	25-A-T-55-40-100-031-000	01
12	TOOL ASSEMBLY FOR REAR SPAR	25-A-T-55-40-205-020-000	01
13	PRESSURE PAD CASTING TOOL FOR REAR SPAR	25-A-M-55-40-205-020-000	01
14	SPACER (AFT RIB #8C - AFT RIB #9)	25-A-C-55-40-305-006-000	01
15	TOOL ASSEMBLY FOR AFT RIB #9 ROOT & TIP	25-A-T-55-40-305-006-000	01

16	SPACER (AFT RIB #9 - AFT RIB #10)	25-A-C-55-40-305-007-000	01
17	TOOL ASSEMBLY FOR AFT RIB #10 ROOT & TIP	25-A-T-55-40-305-007-000	01
18	SPACER (AFT RIB #10 - AFT RIB #11)	25-A-C-55-40-305-008-000	01
19	TOOL ASSEMBLY FOR AFT RIB #11 ROOT & TIP	25-A-T-55-40-305-008-000	01
20	SPACER (AFT RIB #11 - AFT RIB #12)	25-A-C-55-40-305-009-000	01
21	TOOL ASSEMBLY FOR AFT RIB #12 ROOT & TIP	25-A-T-55-40-305-009-000	01
22	SPACER (AFT RIB #12 - AFT RIB #13)	25-A-C-55-40-305-010-000	01
23	TOOL ASSEMBLY FOR AFT RIB #13 ROOT & TIP	25-A-T-55-40-305-010-000	01
24	SPACER (AFT RIB #13 - AFT RIB #14)	25-A-C-55-40-305-011-000	01
25	TOOL ASSEMBLY FOR AFT RIB #14 ROOT & TIP	25-A-T-55-40-305-011-000	01
26	SPACER (AFT RIB #14 -MOULD TIP END)	25-A-C-55-40-305-017-000	01
27	SPACER (MOULD ROOT END - TT AFT RIB #2)	25-A-C-55-40-435-006-000	01
28	TOOL ASSEMBLY FOR TT AFT RIB #2 ROOT & TIP	25-A-T-55-40-435-006-000	01
29	SPACER (TT AFT RIB #2 - TT AFT RIB #3A)	25-A-C-55-40-435-007-000	01
30	TOOL ASSEMBLY FOR TT AFT RIB #3A ROOT & TIP	25-A-T-55-40-435-007-000	01
31	SPACER (TT AFT RIB #3A - TT AFT RIB #5)	25-A-C-55-40-435-008-000	01
32	TOOL ASSEMBLY FOR TT AFT RIB #5 ROOT & TIP	25-A-T-55-40-435-008-000	01
33	SPACER (TT AFT RIB #5 - TT AFT RIB #6)	25-A-C-55-40-435-009-000	01
34	TOOL ASSEMBLY FOR TT AFT RIB #6 ROOT & TIP	25-A-T-55-40-435-009-000	01
35	SPACER (TT AFT RIB #6 - TT AFT RIB #7)	25-A-C-55-40-435-010-000	01
36	TOOL ASSEMBLY FOR TT AFT RIB #7 ROOT & TIP	25-A-T-55-40-435-010-000	01
37	SPACER (TT AFT RIB #7 - TT AFT RIB #8)	25-A-C-55-40-435-011-000	01
38	TOOL ASSEMBLY FOR TT AFT RIB #8 ROOT & TIP	25-A-T-55-40-435-011-000	01
39	SPACER (TT AFT RIB #8 - TT TIP RIB #8B)	25-A-C-55-40-435-017-000	01

Note:

1. **Vendor should supply box type movable trolley to store all small tools.**
2. **Vendor should supply individual Polythene covers for remaining all tools.**

Documents/CAD data/Reports:	
1.	Raw Material CoC & Heat treatment / Stress relieve Reports
2.	Surface Finish / Treatment Reports
3.	CMM / Laser Tracker Contour Reports & Dimensional reports
4.	NDT reports of welding ensuring defect free joints.

5.	Any updated tool 3D CAD model and drawings released by vendor. One set of released drawings should be given in print.

4.2.7 Responsibility of CSIR NAL

4.2.7.1 CSIR-NAL will provide the 3D CAD model and 2D Drawing of all the tools/moulds listed in Table 1 & 2 to the successful bidder.

4.2.7.2 After receiving the moulds at CSIR-NAL, autoclave cure as mentioned in section 4.2.4.5 (Phase 2 - Final Acceptance at CSIR-NAL) will be performed and inspection of the mould as per drawing and contour inspection by Laser Tracker/CMM (as required) for final acceptance, will be carried out at no cost to the vendor.

4.2.8 Packing & Delivery

The Moulds are to be packed in marked wooden boxes, which are being suitable for transportation. Box should be designed with fork lift access profiles in the bottom.

4.2.9 Details of tools (Module 1)

Material for main tool:	**SA 516 Gr 70**
Material for backup structures:	**IS 4923**
Tool Contour Tolerance:	**± 0.3mm**
Finish for machined surface:	**Electroless Nickel Coating**
Finish for backup structure:	**Aluminium paint to withstand operating temperature of 250°C**

4.2.9.1 TOOL FOR NOSE RIB #13B **Dwg.No: 25-A-T-55-40-100-029-000**
Weight : 6.2 Kgs **Qty : One**

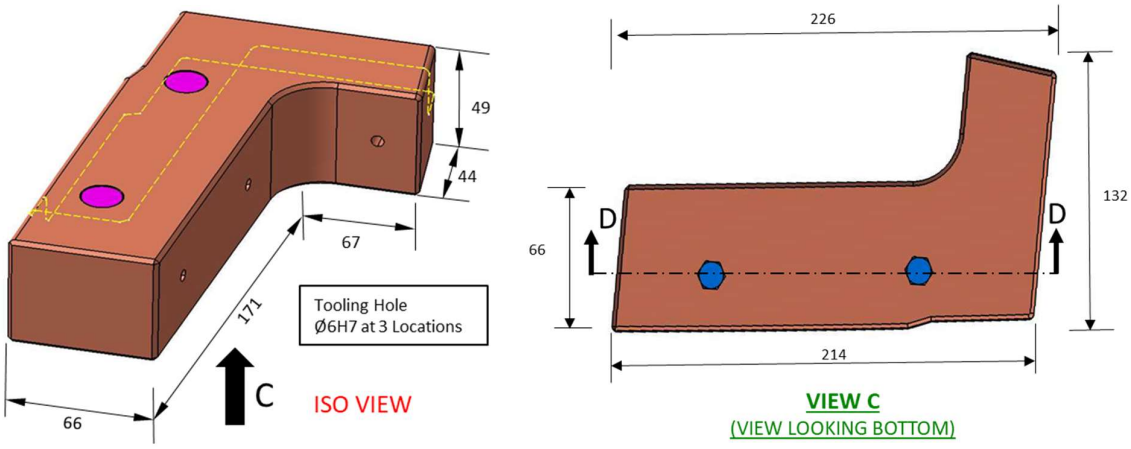

4.2.9.2 TOOL ASSEMBLY FOR HORN SKIN LH AND RH
Dwg. NO : 25-A-T-55-40-350-001-000
Weight : 83.33 + 50 = 133.33 Kgs
Qty : One set

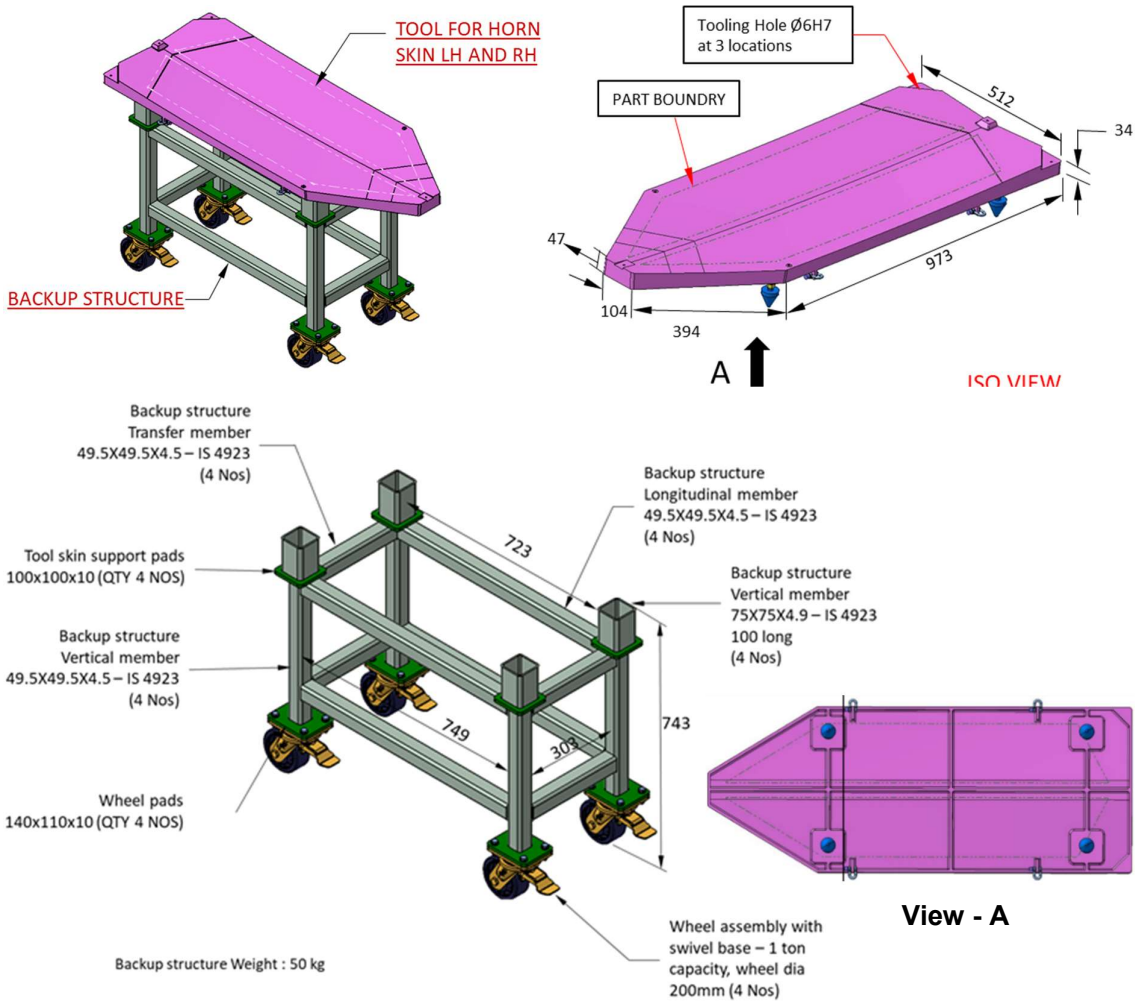

4.2.9.3 TOOL FOR HORN TIP CAP **Dwg.No: 25-A-T-55-40-350-002-000**

Weight : 42 Kgs **Qty : One**

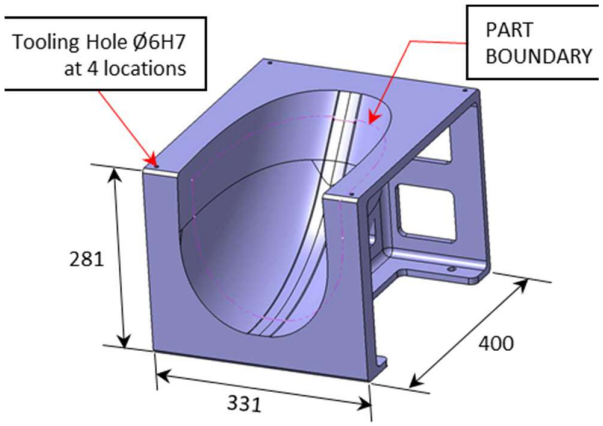

4.2.9.4 TOOL FOR HORN TOP SKIN **Dwg. No: 25-A-T-55-40-350-003-000**
Weight : 57.16 + 56.18 = 114.5 Kgs **Qty : One set**

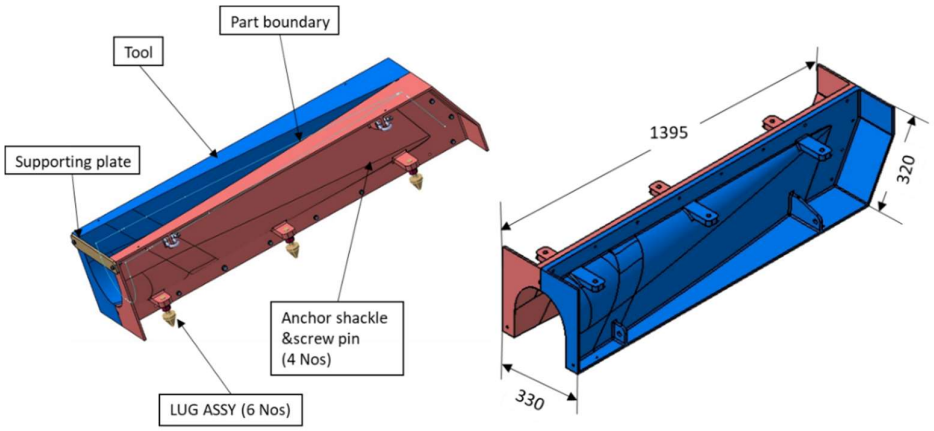

4.2.9.5 TOOL FOR HORN TOP HINGE ACCESS PANEL
Dwg. No: 25-A-T-55-40-350-005-000 **Weight : 2.5 Kgs** **Qty : One**

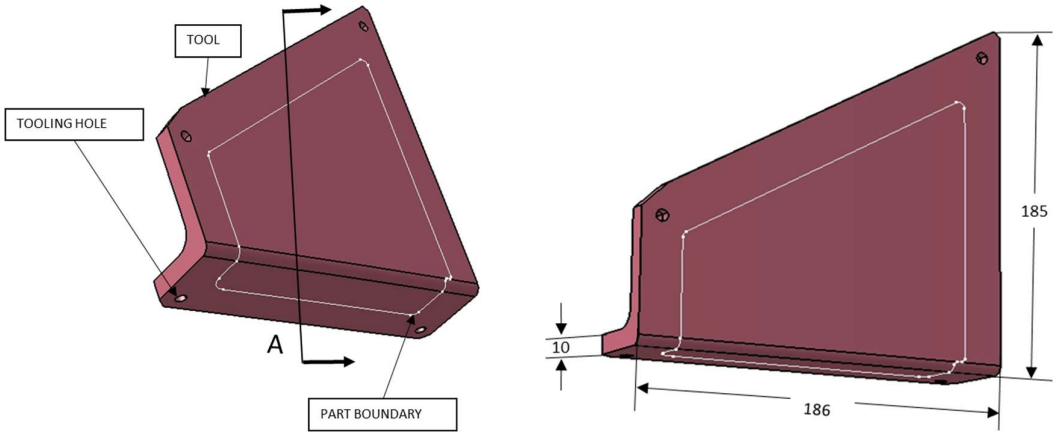

4.2.9.6 TOOL FOR HORN ACCESS COVER **Dwg. No: 25-A-T-55-40-360-001-000**
Weight: 36.64 + 36 + 2.15 = 75.41 Kgs **Qty : One set**

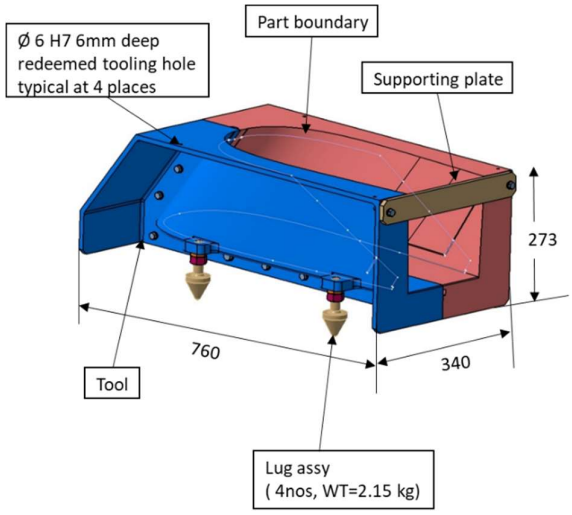

4.2.9.7 TOOL ASSEMBLY FOR AUX SPAR #1 (HORN TIP)

Dwg. No : 25-A-T-55-40-350-010-000 **Weight : 3.84 + 3.87 = 7.74 Kgs**
Qty : One set

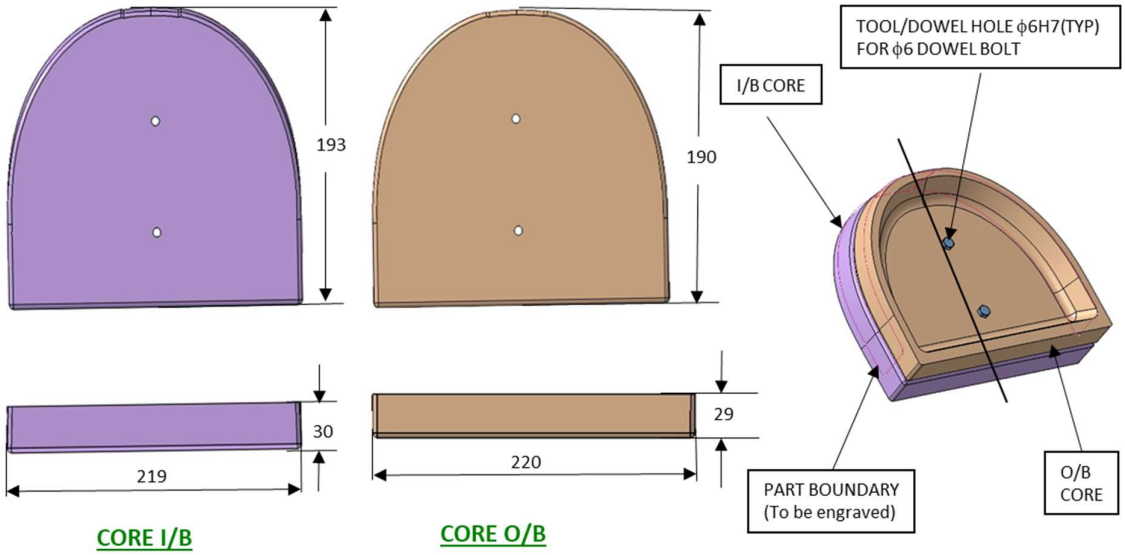

CORE I/B CORE O/B

4.2.9.8 TOOL ASSEMBLY FOR HORN RIB #15

Dwg. No : 25-A-T-55-40-350-017-000
Weight : 22.4 + 23.6 + 1.25 = 48 Kgs
Qty : One set

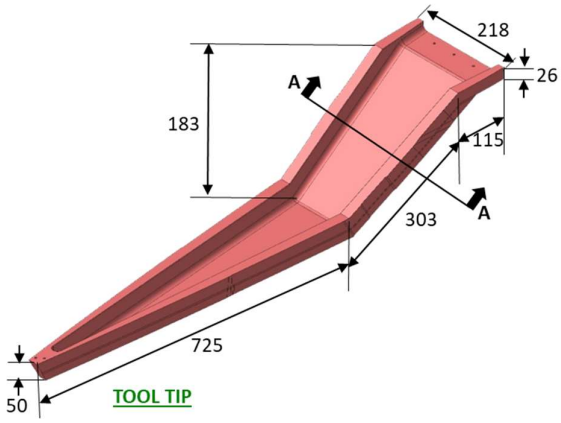

TOOL TIP

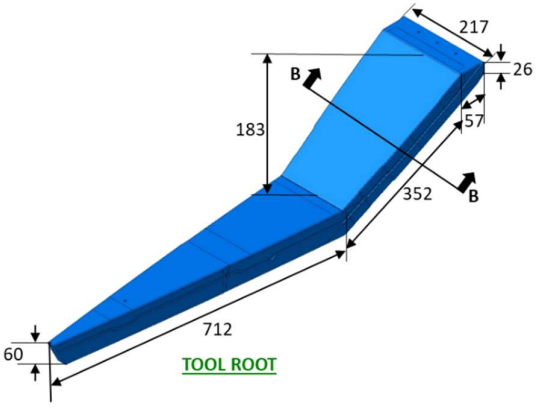

TOOL ROOT

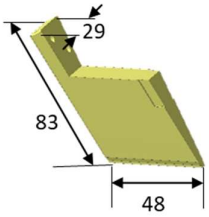

CURING PLUG - TIP

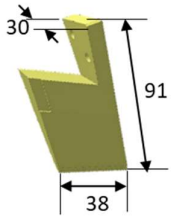

TIP CURING PLUG - ROOT

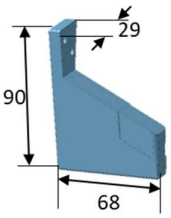

LAY-UP PLUG ROOT

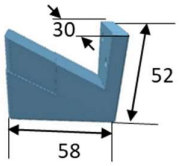

LAY-UP PLUG-TIP

4.2.9.9 TOOL ASSEMBLY FOR HORN RIB #16 **Dwg. No : 25-A-T-55-40-350-018-000**
Weight : 35.6 + 37.5 + 1.1 = 73.1 Kgs **Qty : One set**

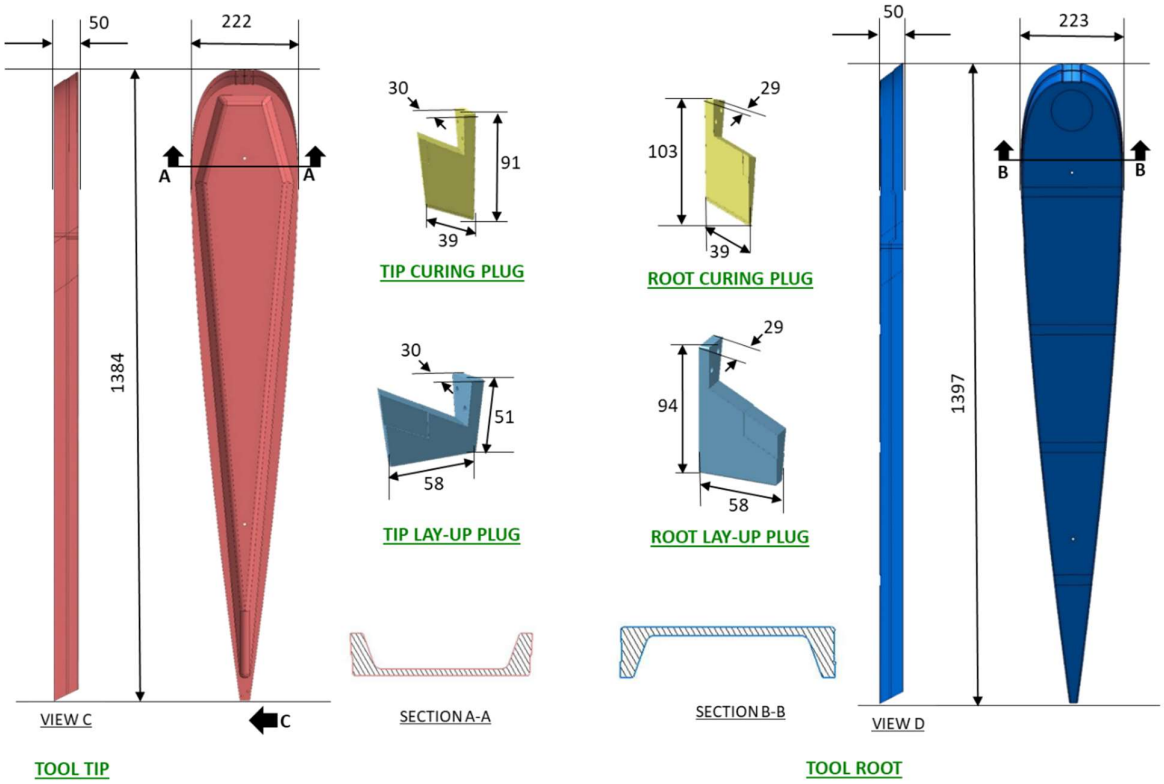

4.2.9.10 TOOL FOR AFT RIB #8C **Dwg. No: 25-A-T-55-40-300-006-000**
Weight : 1.83 Kgs **Qty : One**

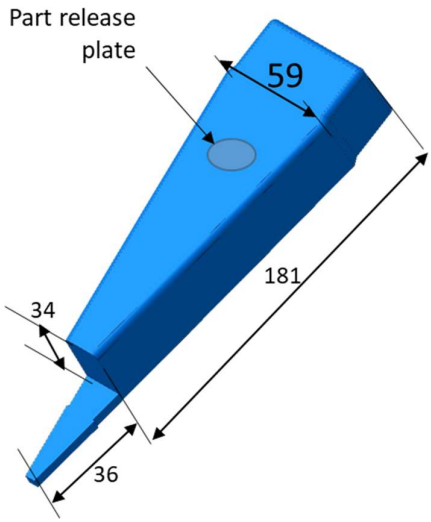

4.2.9.11 CAULPLATE MASTER FOR AFT RIB #8C
Dwg. No: 25-A-M-55-40-300-006-000 Weight : 2.16 Kgs Qty : One

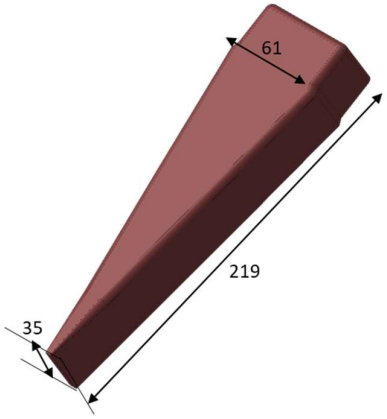

4.2.9.12 BASE PLATE END RIB CURING TOOLS
Dwg. No: 25-A-T-55-40-300-020-000 Weight : 18.16 Kgs Qty : One

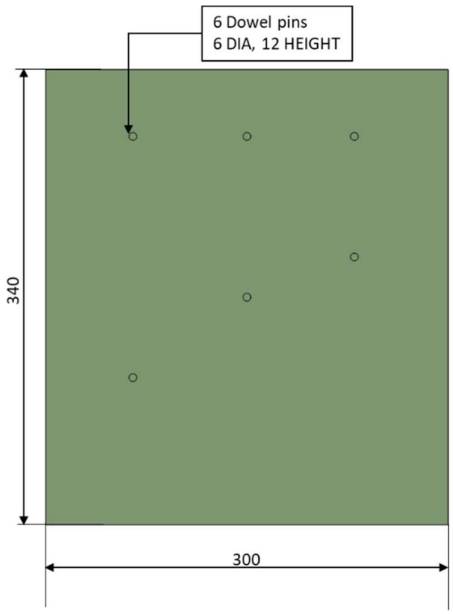

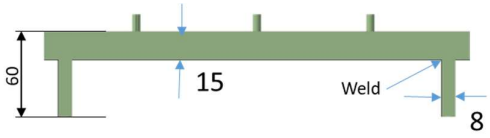

4.2.9.13 TOOL FOR TT ROOT RIB (STA #1) Dwg. No: 25-A-T-55-40-400-001-000
Weight : 3.34 Kgs Qty : One

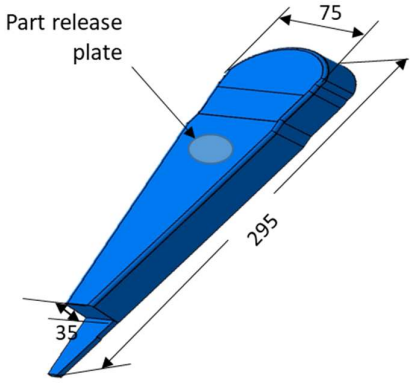

4.2.9.14 CAUL PLATE MASTER FOR TT ROOT RIB (STA #1)
Dwg. No: 25-A-M-55-40-400-001-000 Weight : 3.72 Kgs Qty : One

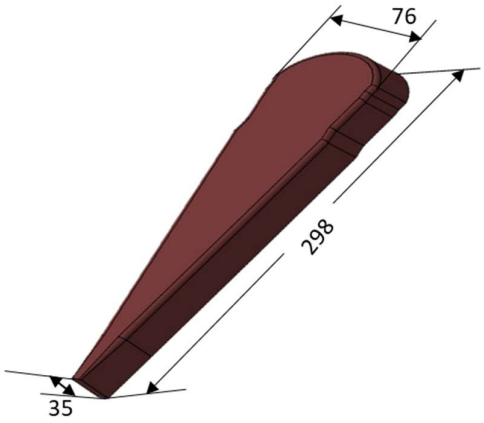

4.2.9.15 TOOL FOR TT TIP RIB (STA #8B)
Dwg. No: 25-A-T-55-40-400-002-000 Weight : 1.19 Kgs Qty : One

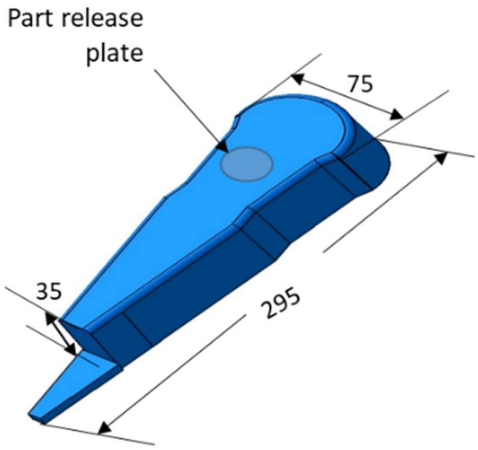

4.2.9.16 CAUL PLATE MASTER FOR TT TIP RIB (STA #8B)
Dwg. No: 25-A-M-55-40-400-002-000 Weight : 1.48 Kgs Qty : One

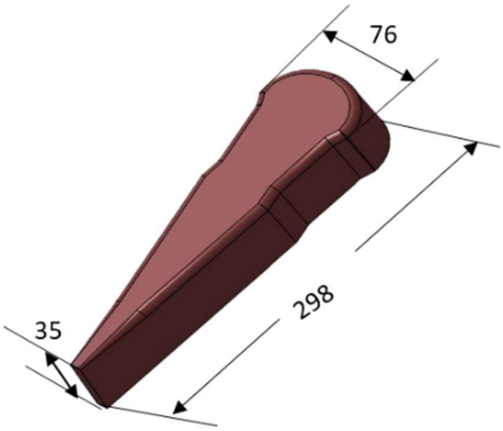

4.2.9.17 TOOL ASSEMBLY FOR IS BOX ACCESS COVER FOR TT ACTUATOR ASSY (STA#3 TO STA#5)

Dwg. No: 25-A-T-55-40-200-001-000 Weight : 31.7 Kgs Qty : One set

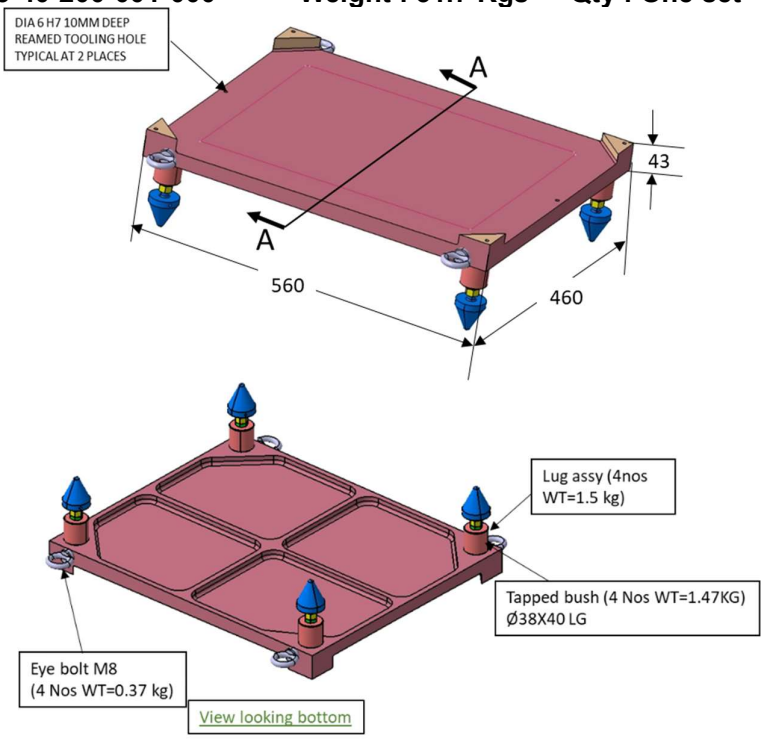

4.2.9.18 TOOL FOR TRAILING EDGE BLOCK AFT BOX, TRIM TAB AND HORN SKIN

Dwg. No: 25-A-T-55-40-305-016-000 Weight : 51.6 Kgs Qty : One set

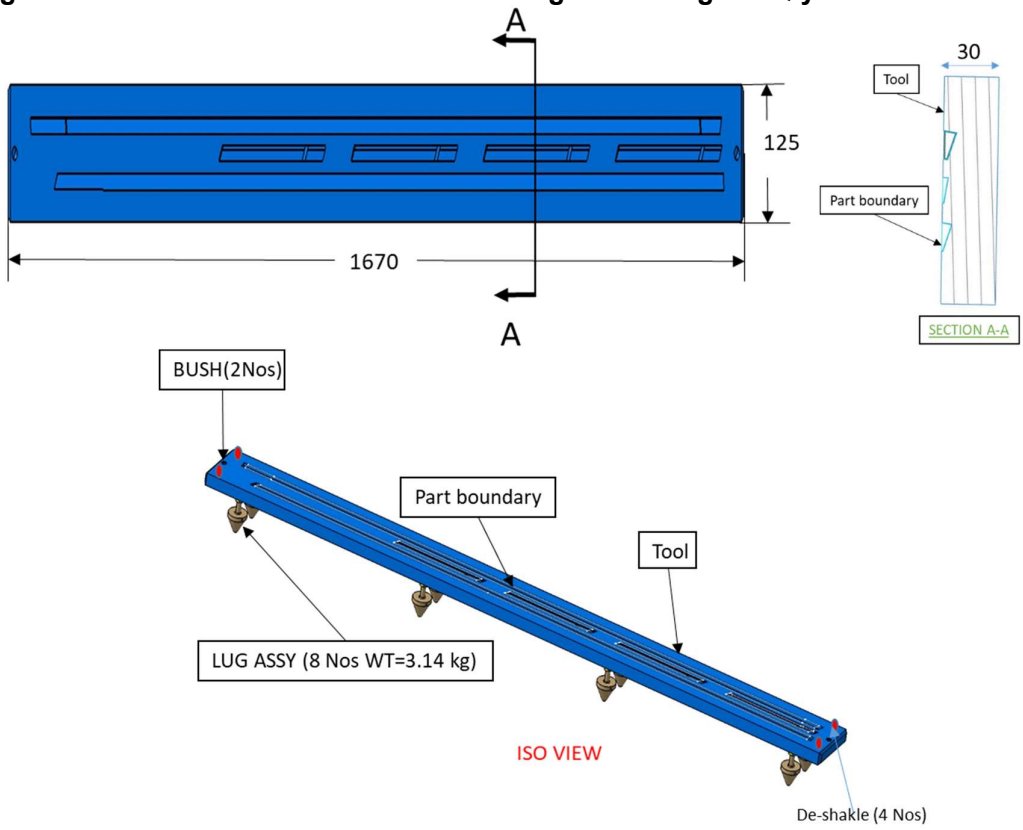

4.2.10 Details of tools (Module 2)

Raw Material : AL 6082 / HE 30
Tool Contour Tolerance : ± 0.3mm
Finish : ANODIZATION

4.2.10.1 TOOL FOR NOSE SPLICE PLATE STA#11 TO STA#13B LH AND RH

Dwg. No: 25-A-T-55-40-200-030-000 Weight : 5.89 Kgs Qty : One

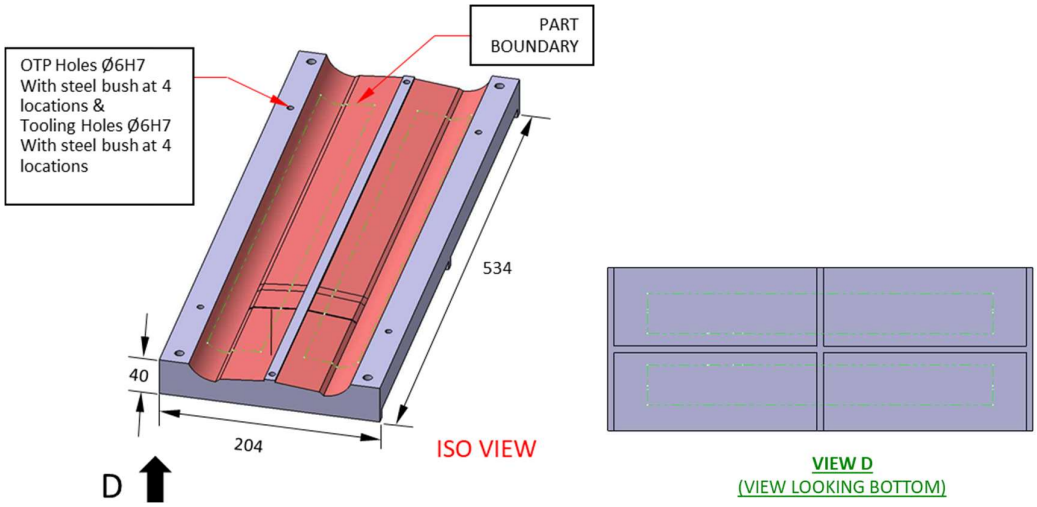

4.2.10.2 TOOL FOR AFT RIB PLUG, HORN RIB PLUG AND TRIM TAB RIB PLUG

Dwg. No: 25-A-T-55-40-305-017-000 Weight : 9.6 Kgs Qty : One set

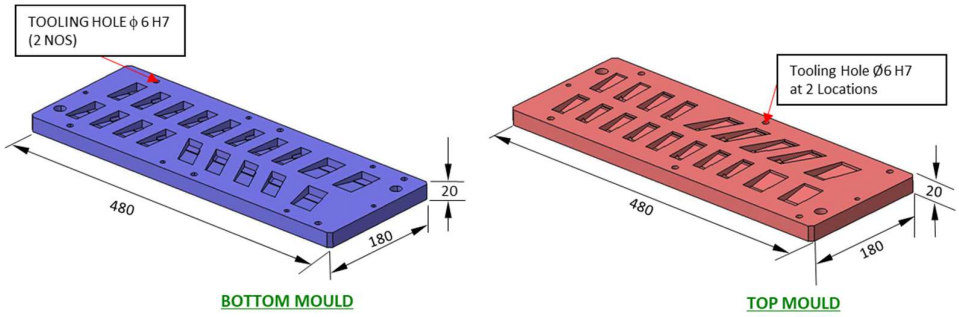

4.2.10.3 TOOL FOR AFT BOX CLIPS STA #11,12,13,14 & TT NOSE CLIP (STA#1)

Dwg. No: 25-A-T-55-40-300-012-000 Weight : 7.1 Kgs Qty : One

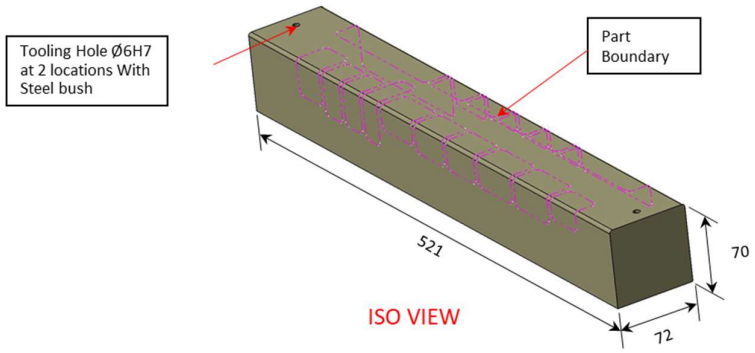

4.2.10.4 TOOL FOR SHIM STA#8C LH & RH

Dwg. No: 25-A-T-55-40-300-013-000 **Weight : 0.3 Kgs** **Qty : One**

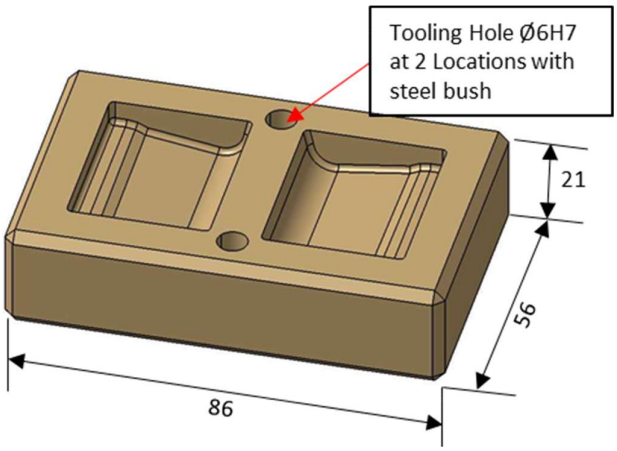

4.2.10.5 LAYUP TOOL FOR HORN TIP CAP

Dwg. No: 25-A-C-55-40-350-002-000 **Weight : 42.6 Kgs** **Qty : One set**

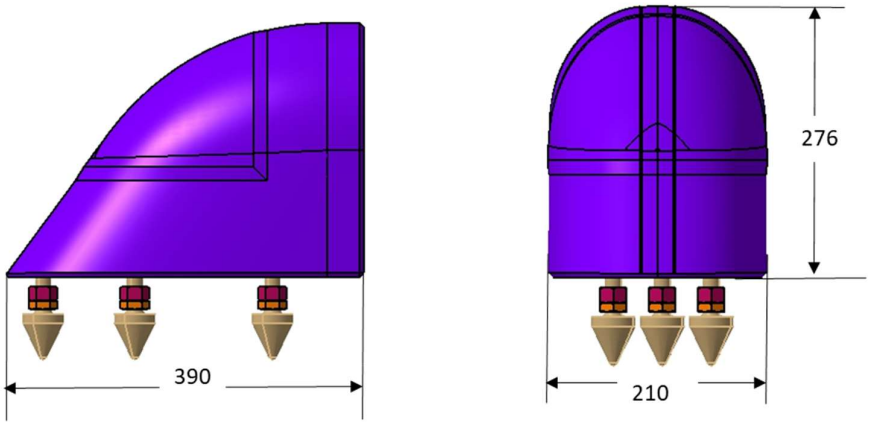

4.2.10.6 LAYUP TOOL FOR HORN TOP SKIN

Dwg. No: 25-A-C-55-40-350-003-000 **Weight : 136.3 Kgs** **Qty : One set**

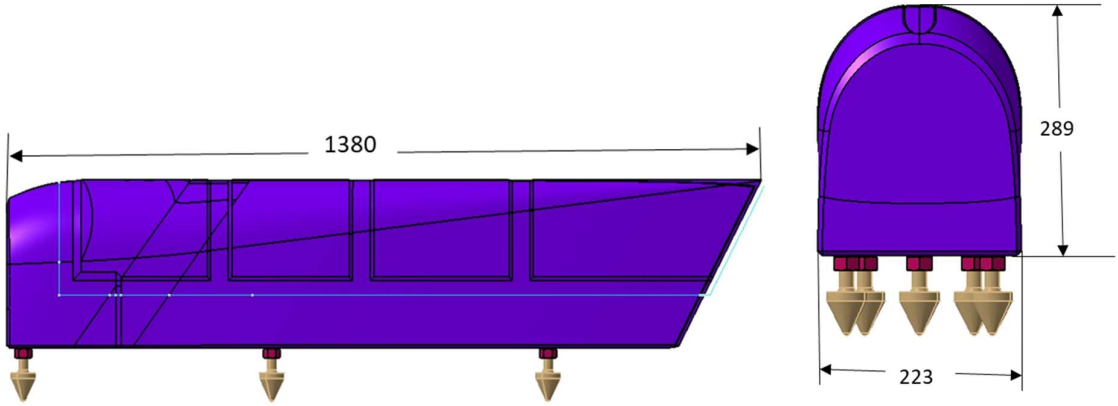

4.2.10.7 LAYUP TOOL FOR HORN ACCESS COVER

Dwg. No: 25-A-C-55-40-360-001-000 Weight : 81.35 Kgs Qty : One set

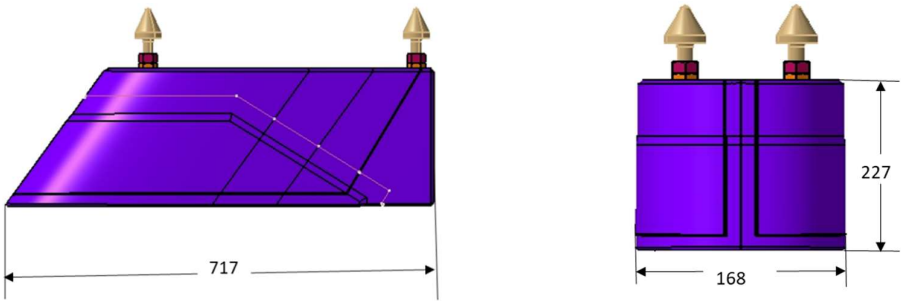

4.2.10.8 LAYUP TOOL FOR AFT RIB #8C

Dwg. No: 25-A-C-55-40-300-006-000 Weight : 0.69 Kgs Qty : One

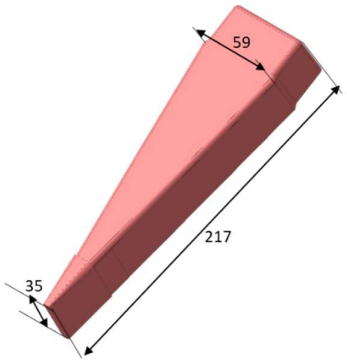

4.2.10.9 LAYUP TOOL FOR TT ROOT RIB (STA #1)

Dwg. No: 25-A-C-55-40-400-001-000 Weight : 1.22 Kgs Qty : One

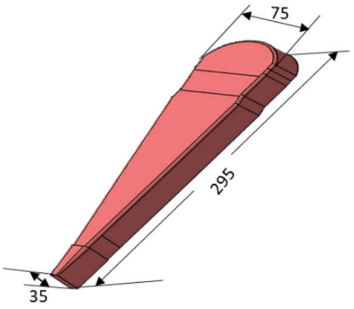

4.2.10.10 LAYUP TOOL FOR TT TIP RIB (STA #8B)

Dwg. No: 25-A-C-55-40-400-002-000 Weight : 0.21 Kgs Qty : One

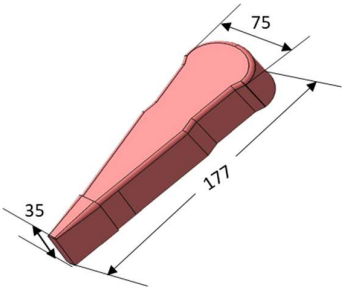

4.2.10.11 TOOL FOR CLIPS AND SPLICE PLATE (NOSE BOX ASSY, AFT BOX ASSY, HORN ASSY & TRIM TAB ASSY)

Dwg. No: 25-A-T-55-40-100-031-000 Weight : 2.5 Kgs Qty : One

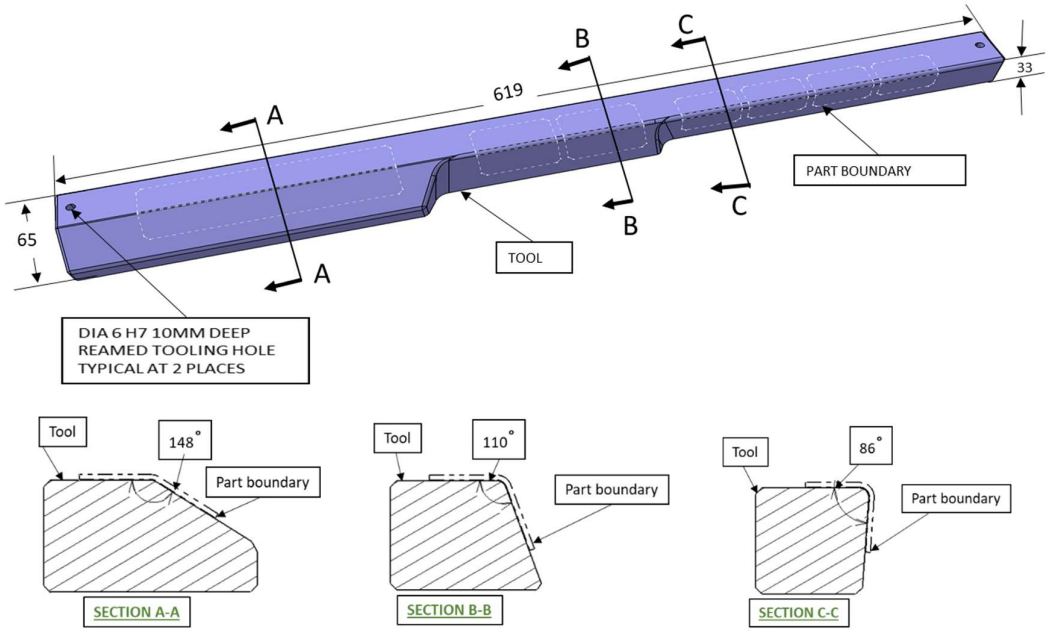

4.2.10.12 TOOL ASSEMBLY FOR REAR SPAR

Dwg. No : 25-A-T-55-40-205-020-000

Weight : 57.8 + 49.2 = 107 Kgs Qty : One set

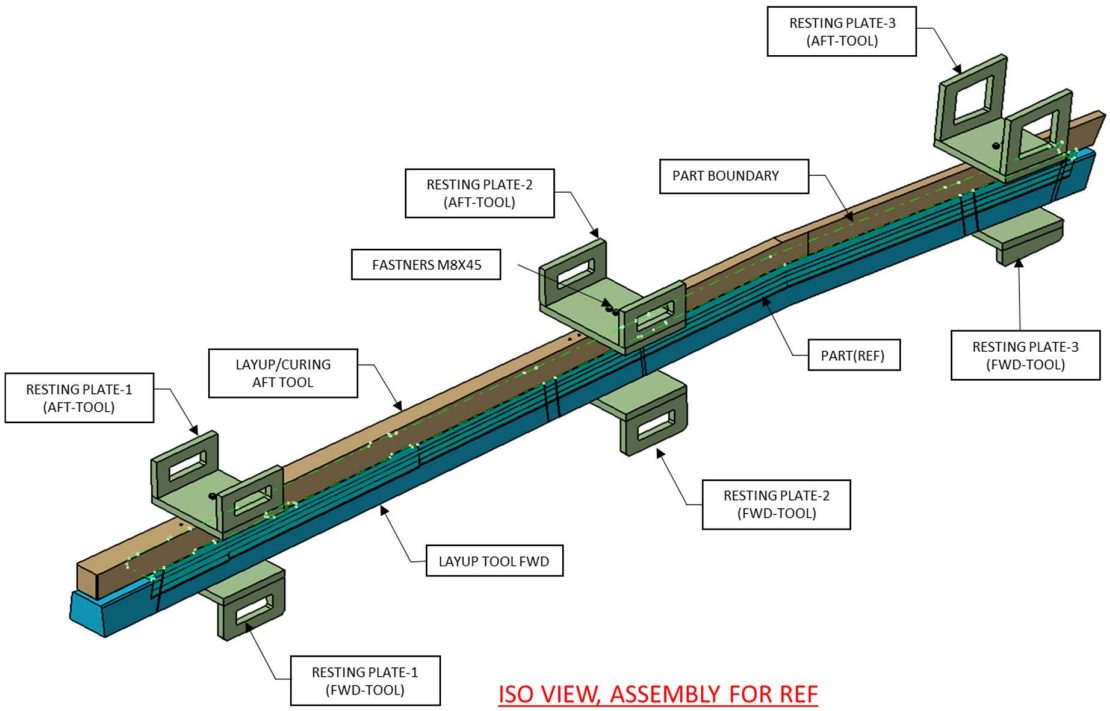

ISO VIEW, ASSEMBLY FOR REF

LAYUP TOOL – FWD

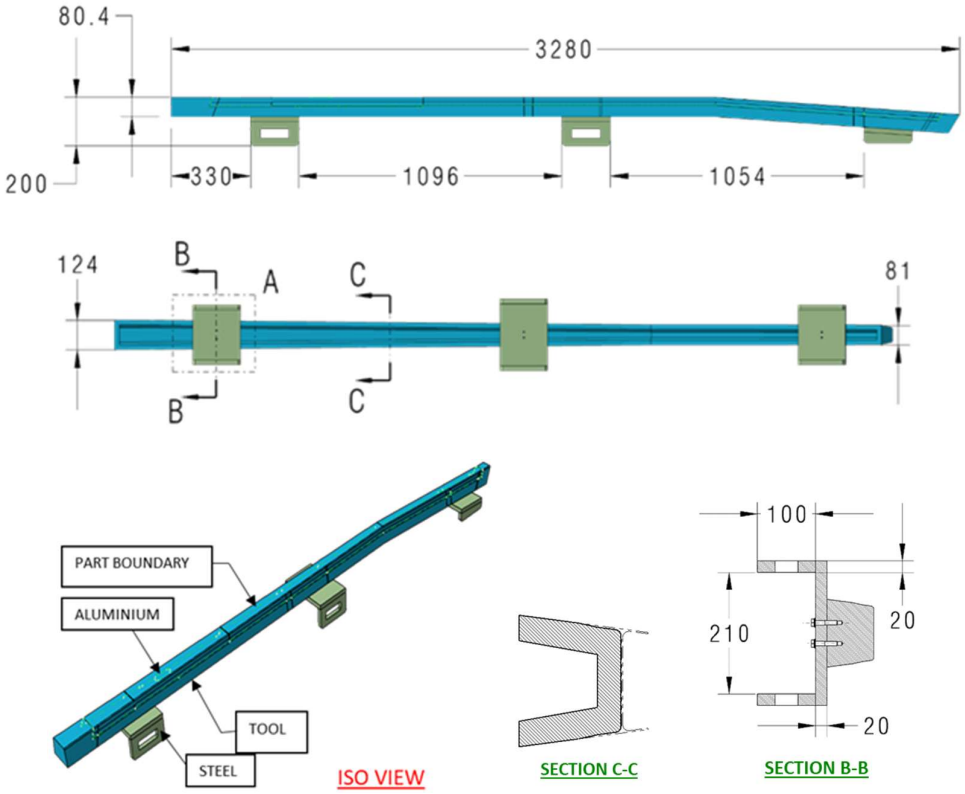

LAYUP/CURING TOOL – AFT

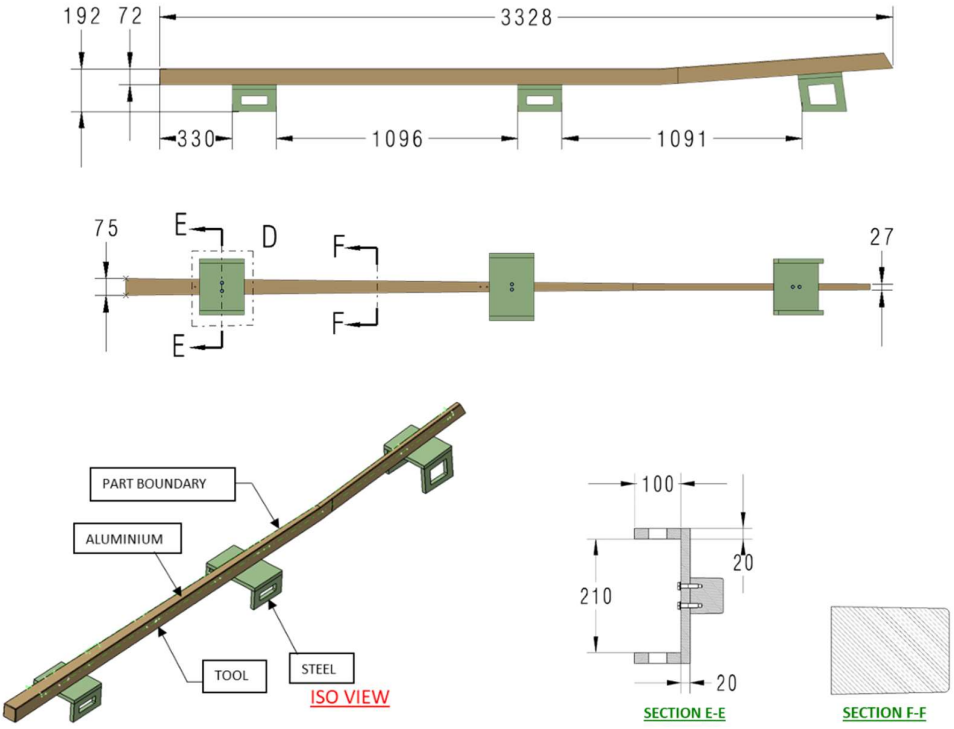

4.2.10.13 PRESSURE PAD CASTING TOOL FOR REAR SPAR

Dwg. No: 25-A-M-55-40-205-020-000 Weight : 148 Kgs Qty : One set

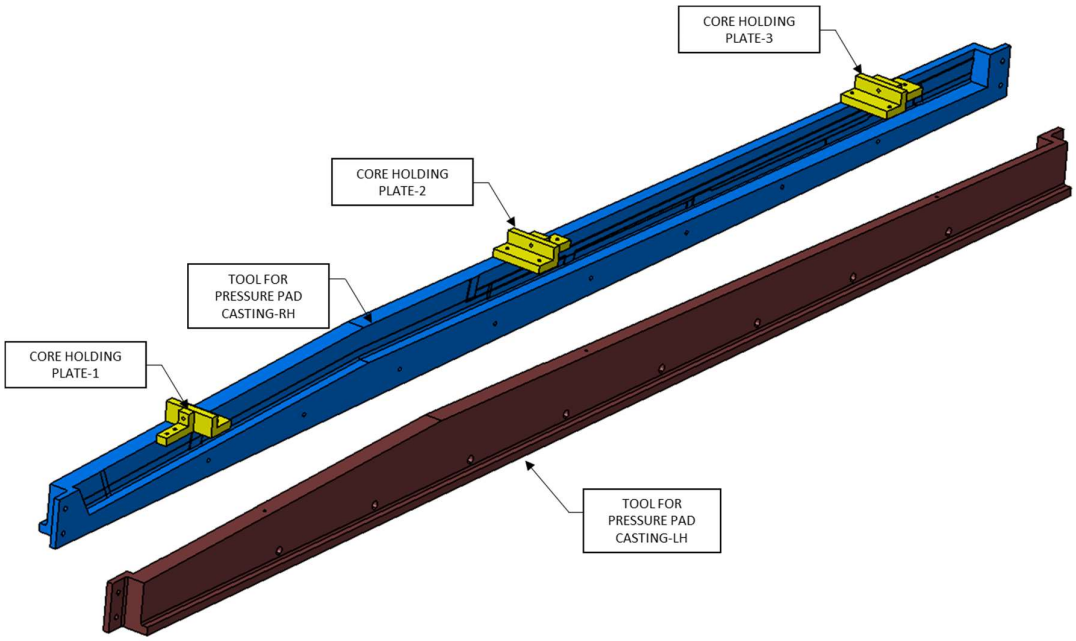

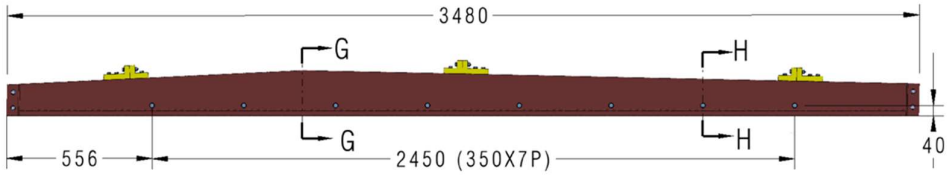

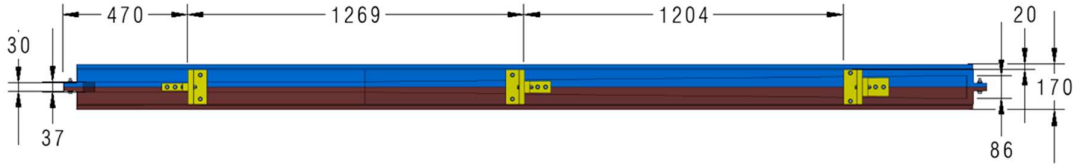

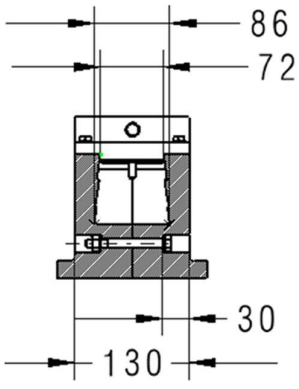

4.2.10.14 SPACERS (AFT RIB #8C TO MOULD TIP END) **Dwg. No : Refer Table 5**
Weight : Refer Table 5 **Qty : Refer Table 5**

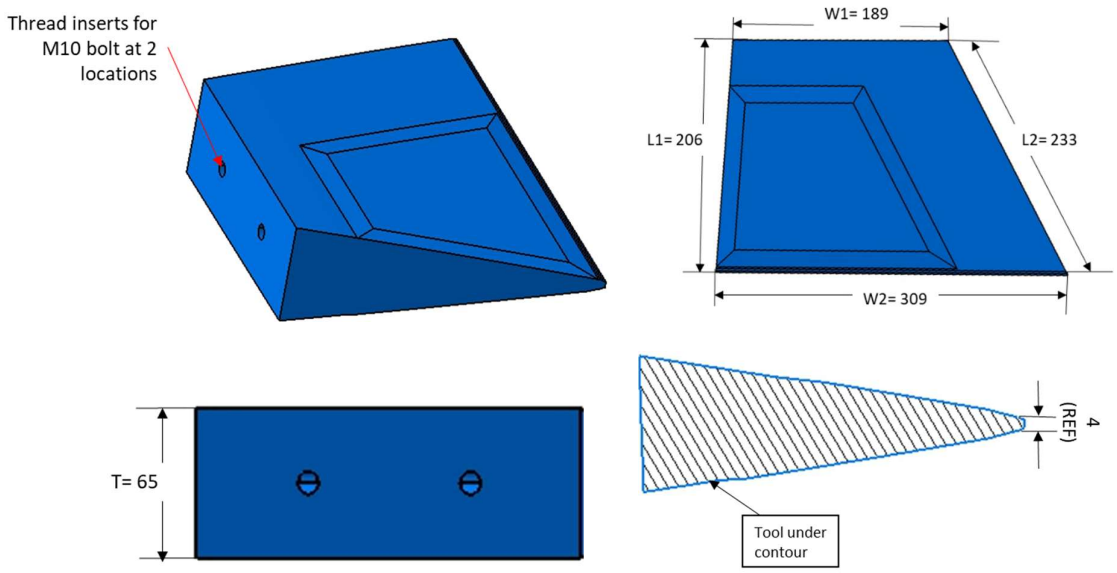

Table 5: AFT Rib spacer dimension and weight details

Sl. No.	Tool Name	Tool Number	CAD model size	Weight in Kgs	Qty
1.	SPACER (AFT RIB #8C - AFT RIB #9)	25-A-C-55-40-305-006-000	309×206×65	4.8	1
2.	SPACER (AFT RIB #9 - AFT RIB #10)	25-A-C-55-40-305-007-000	206×155×65	3.2	1
3.	SPACER (AFT RIB #10 - AFT RIB #11)	25-A-C-55-40-305-008-000	205×151×65	3.1	1
4.	SPACER (AFT RIB #11 - AFT RIB #12)	25-A-C-55-40-305-009-000	204×160×65	3.3	1
5.	SPACER (AFT RIB #12 - AFT RIB #13)	25-A-C-55-40-305-010-000	203×151×65	3.1	1
6.	SPACER (AFT RIB #13 - AFT RIB #14)	25-A-C-55-40-305-011-000	217×209×69	4.6	1
7.	SPACER (AFT RIB #14 -MOULD TIP END)	25-A-C-55-40-305-017-000	233×197×74	4.8	1

4.2.10.15 TOOL ASSEMBLY FOR AFT RIBS – ROOT & TIP
Dwg. No: Refer Table 6 Weight: Refer Table 6 Qty: Refer Table 6

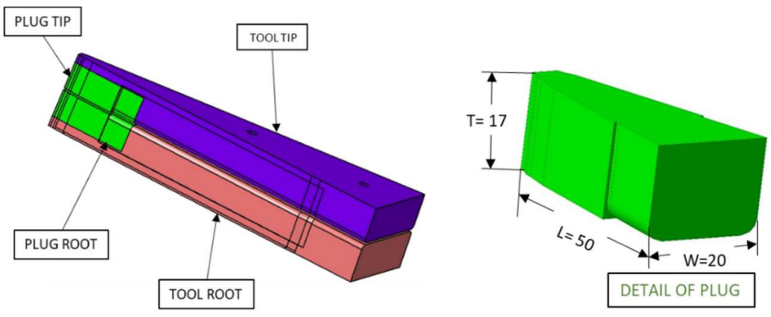

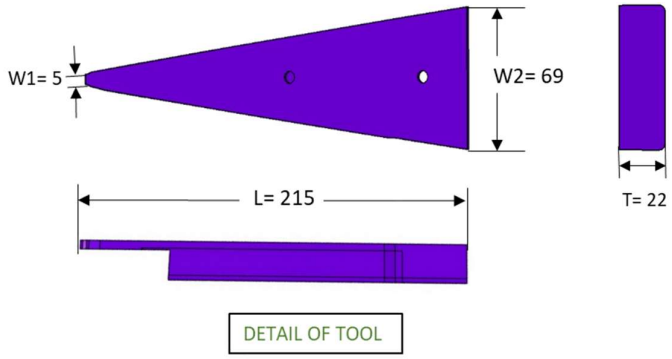

Table 6: AFT Rib tools dimension and weight details

Sl. No.	Tool Name	Tool Number	CAD model size	Weight in Kgs	Qty
1.	TOOL ASSEMBLY FOR AFT RIB #9 ROOT & TIP	25-A-T-55-40-305-006-000	217×70×46	0.86	1 set
2.	TOOL ASSEMBLY FOR AFT RIB #10 ROOT & TIP	25-A-T-55-40-305-007-000	201×65×44	0.86	1 set
3.	TOOL ASSEMBLY FOR AFT RIB #11 ROOT & TIP	25-A-T-55-40-305-008-000	200×65×44	0.86	1 set
4.	TOOL ASSEMBLY FOR AFT RIB #12 ROOT & TIP	25-A-T-55-40-305-009-000	201×65×44	0.86	1 set
5.	TOOL ASSEMBLY FOR AFT RIB #13 ROOT & TIP	25-A-T-55-40-305-010-000	202×65×44	0.86	1 set
6.	TOOL ASSEMBLY FOR AFT RIB #14 ROOT & TIP	25-A-T-55-40-305-011-000	203×65×44	0.86	1 set

4.2.10.16 SPACERS FOR TT AFT RIBS **Dwg. No: Refer Table 7**

Weight : Refer Table 7 **Qty : Refer Table 7**

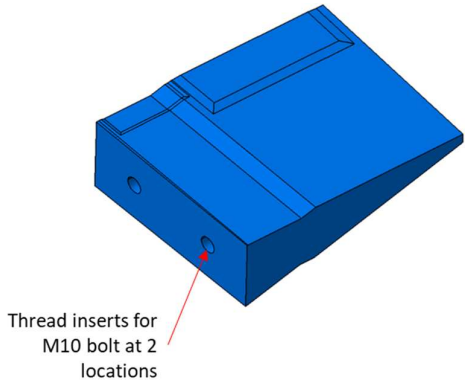

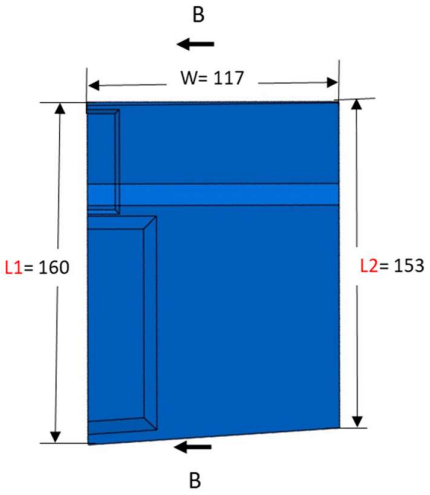

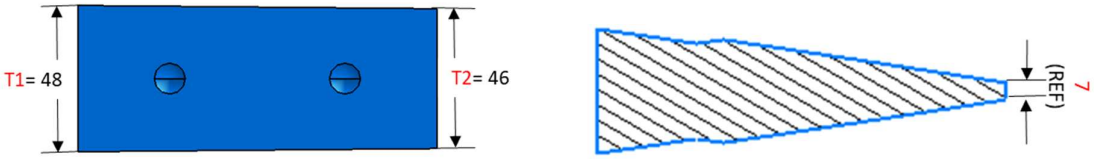

Table 7: TT AFT Rib spacers dimension and weight details

Sl. No.	Tool Name	Tool Number	CAD model size	Weight in Kgs	Qty
1.	SPACER (MOULD ROOT END - TT AFT RIB #2)	25-A-C-55-40-435-006-000	255×193×71	5	1
2.	SPACER (TT AFT RIB #2 - TT AFT RIB #3A)	25-A-C-55-40-435-007-000	251×239×68	5.04	1
3.	SPACER (TT AFT RIB #3A - TT AFT RIB #5)	25-A-C-55-40-435-008-000	327×234×64	6.97	1
4.	SPACER (TT AFT RIB #5 - TT AFT RIB #6)	25-A-C-55-40-435-009-000	209×197×57	4.08	1
5.	SPACER (TT AFT RIB #6 - TT AFT RIB #7)	25-A-C-55-40-435-010-000	207×194×56	3.6	1
6.	SPACER (TT AFT RIB #7 - TT AFT RIB #8)	25-A-C-55-40-435-011-000	217×177×52	3.2	1
7.	SPACER (TT AFT RIB #8 - TT TIP RIB #8B)	25-A-C-55-40-435-017-000	160×117×48	1.4	1

4.2.10.17 TOOL ASSEMBLY FOR TT AFT RIB – ROOT & TIP

Dwg. No: Refer Table 8 Weight: Refer Table 8 Qty: Refer Table 8

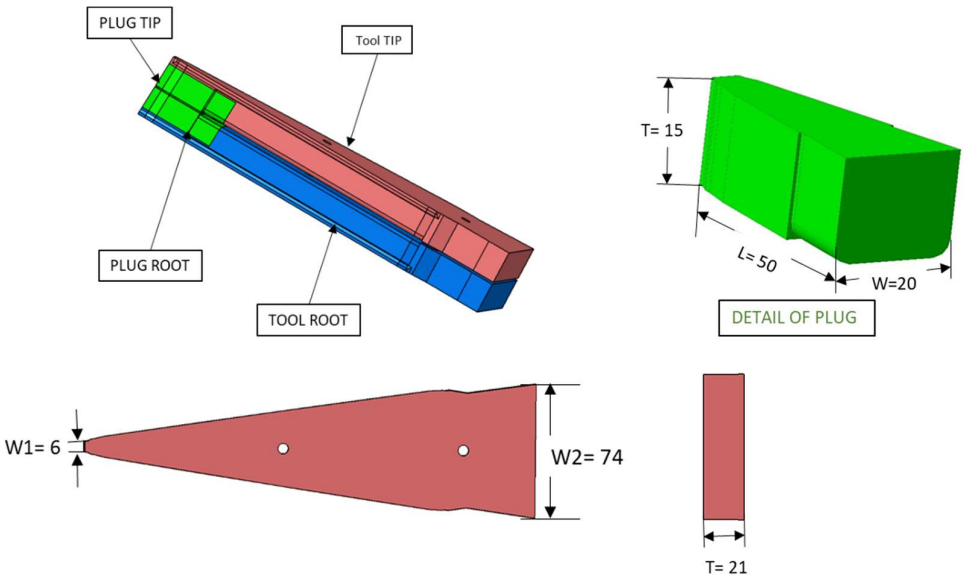

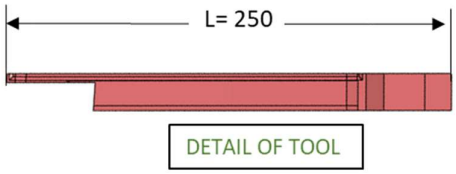

Table 8: TT AFT Rib Tools dimension and weight details

Sl. No.	Tool Name	Tool Number	CAD model size	Weight in Kgs	Qty
1.	TOOL ASSEMBLY FOR TT AFT RIB #2 ROOT & TIP	25-A-T-55-40-435-006-000	252×74×40	1.2	1 set
2.	TOOL ASSEMBLY FOR TT AFT RIB #3A ROOT & TIP	25-A-T-55-40-435-007-000	234×69×40	1.01	1 set
3.	TOOL ASSEMBLY FOR TT AFT RIB #5 ROOT & TIP	25-A-T-55-40-435-008-000	210×57×40	0.84	1 set
4.	TOOL ASSEMBLY FOR TT AFT RIB #6 ROOT & TIP	25-A-T-55-40-435-009-000	195×58×40	0.74	1 set
5.	TOOL ASSEMBLY FOR TT AFT RIB #7 ROOT & TIP	25-A-T-55-40-435-010-000	179×53×40	0.66	1 set
6.	TOOL ASSEMBLY FOR TT AFT RIB #8 ROOT & TIP	25-A-T-55-40-435-011-000	162×47×40	0.46	1 set

4.3 Scope of Supply and incidental works:

Scope of Supply includes the following:

(i) Supply of the Tools / system along with the accessories as per detailed specifications mentioned in section 4.2 above.
(ii) Acceptance as per section 4.4.4.
(iii) On site comprehensive warranty as per section 4.5
(iv) Delivery schedule as per section 4.6.

4.4 Inspection & Tests

4.4.1 General

a) The Supplier shall at its own expense and at no cost to the Purchaser carry out all such tests and/or inspections of the Goods and Related Services as are specified here.

b) The inspections and tests may be conducted on the premises of the Supplier or its subcontractor(s), at the point of delivery and/or at the Goods final destination.

c) Whenever the Supplier is ready to carry out any such test and inspection, they shall give a reasonable advance notice, including the place and time, to the Purchaser. The Supplier shall obtain from any relevant third party or manufacturer any necessary

permission or consent to enable the Purchaser or its designated representative to attend the test and/or inspection.

d) Should any inspected or tested Goods fail to conform to the specifications, the Purchaser may reject the goods and the Supplier shall either replace the rejected Goods or make alterations necessary to meet specification requirements free of cost to the Purchaser.

e) The Purchaser's right to inspect, test and, where necessary, reject the Goods after the Goods' arrival at final destination shall in no way be limited or waived by reason of the Goods having previously been inspected, tested and passed by the Purchaser or its representative prior to the Goods shipment.

f) The Supplier shall provide the Purchaser with a report of the results of any such test and/or inspection.

g) With a view to ensure that claims on insurance companies, if any, are lodged in time, the bidders and /or the Indian agent, if any, shall be responsible for follow up with their principals for ascertaining the dispatch details and informing the same to the Purchaser and he shall also liaise with the Purchaser to ascertain the arrival of the consignment after customs clearance so that immediately thereafter in his presence the consignment could be opened and the insurance claim be lodged, if required, without any loss of time. Any delay on the part of the bidder/ Indian Agent would be viewed seriously and he shall be directly responsible for any loss sustained by the purchaser on the event of the delay.

h) Before the goods and Tools are taken over by the Purchaser, the Supplier shall supply operation and maintenance Manuals together with Drawings of the goods and Tools built. These shall be in such details as will enable the Purchase to operate, maintain, adjust and repair all parts of the works as stated in the specifications.

i) The Manuals and Drawings shall be in the ruling language (English) and in such form and numbers as stated in the Contract.

j) Unless and otherwise agreed, the goods and Tools shall not be considered to be completed for the purposes of taking over until such Manuals and Drawing have been supplied to the Purchaser.

k) On successful completion of acceptability test, receipt of deliverables, etc. and after the Purchaser is satisfied with the working of the Tools, the acceptance certificate signed by the Supplier and the representative of the Purchaser will be issued. The date on which such certificate is signed shall be deemed to be the date of successful commissioning of the Tools.

4.4.2 Manufacturer’s Inspection Certificate

After the goods are manufactured and assembled, inspection and testing of the goods shall be carried out at the supplier’s plant by the supplier, prior to shipment to check whether the goods are in conformity with the technical specifications. Manufacturer’s test certificate with data sheet shall be issued to this effect and submitted along with the delivery documents. The purchaser reserves the options to be present at the supplier’s premises during such inspection and testing.

4.4.3 Pre-Dispatch Inspection

4.4.3.1 Whenever vendor is ready to carry out CMM/Laser Tracker inspection of the moulds/tools, vendor shall give at least ten days' advance notice, including the place and time to CSIR-NAL. CMM/Laser Tracker inspection at vendor's designated place to be arranged by the vendor.

4.4.3.2 NAL personnel may visit at different stages of manufacturing (mentioned below) of tools, at supplier's place or at other place where work is in progress.

i. During contour machining
ii. During contour inspection

1)	Location	At vendor location
2)	Number of persons	02
3)	Period of pre-dispatch Inspection	6 days spread over 3 visits (max)
4)	Nature of pre-dispatch Inspection	a) Tool contour and dimensional inspection b) Verification of assembly/disassembly of tool

Note:

(i) Pre- Dispatch inspection of tool will have to be done at vendor place like Tool Contour, Dimensional Inspection and leak test at room temperature. The vendor should inspect final machined contour of tool by using Coordinate Measuring Machine (CMM)/Laser tracker (LT) with valid calibration in the presence of CSIR-NAL team. Vendor should meet all specifications as per tool drawing.

(ii) Travel expenses of CSIR-NAL personnel for pre-dispatch will be borne by CSIR-NAL.

(iii) Vendor to share complete inspection reports prior to pre-dispatch inspection including raw material, CoC, ensuring no cracks and stress relieving/ heat treatment.

4.4.4 Acceptance Test

4.4.4.1 The acceptance test will be conducted by the Purchaser, their consultant or other such person nominated by the Purchaser at its option after the moulds / tools are received at Purchaser's site in the presence of supplier's representatives. The acceptance will involve trouble free operation. There shall not be any additional charges for carrying out acceptance test. No malfunction, partial or complete failure of any part of the equipment is expected to occur. The Supplier shall maintain necessary log, in respect of the result of the test to establish to the entire satisfaction of the Purchaser, the successful completion of the test specified.

4.4.4.2 On the event of the ordered item failing to pass the acceptance test, a period not exceeding two weeks will be given to rectify the defects and clear the acceptance test, failing which, the Purchaser reserve the right to get the moulds/tools to be replaced by the Supplier at no extra cost to the Purchaser.

4.4.4.3 Successful conduct and conclusion of the acceptance test for the installed goods and equipment shall also be the responsibility and at the cost of the Supplier.

4.4.4.4 The acceptance tests at the final destination include as per ATP clause 4.2.4.

4.5 Incidental Services: On site Comprehensive Warranty

The vendor shall provide warranty of one year or 10 cures whichever is earlier, for any surface cracks, vacuum leak or any other manufacturing defect like warpage that makes the mould deviate from the tender specifications after the date of acceptance by CSIR-NAL.

4.6 Delivery Schedule (including supply & acceptance)

Delivery of the item		**Acceptance of the item**
Days / Weeks / Months from the date of PO	**Location**	**Days / Weeks / Months from the date of supply**
06 months	CSIR-NAL, Bengaluru	31 Days

CHAPTER - 5

PRICE SCHEDULE FORM

Name of the Bidder_____ **Tender No.**_____

1	2	3	4	5	6	7	8	9	10	11	12
Sl. No.	Item Description With HSN code	Country of origin	Unit	Quantity	Unit Rate Ex-Works, Ex-warehouse, Ex-show room off the shelf price (inclusive of all taxes already paid)	Total price Ex-Works, Ex-warehouse, Ex-show room off the shelf price (inclusive of all taxes already paid) 5x6	GST & other taxes payable, if contract is awarded	Packing & forwarding up to station of dispatch if any	Charges for inland transportation, insurance up to Lab. / Instt.by ***air/road/rail (retain one only)***	Total Price	Installation, Commissioning and training charges, if any

Note:

(a) The cost of optional items, if any shall be indicated separately

(**b)** Cost of Spares, if any

Total Bid price _____

in words _____

Signature of Bidder _____

Name _____

Business Address _____

CHAPTER-6

Qualification Requirements Eligibility & Qualification Requirements

6.1 Eligibility Criteria

a) Legal Valid Entity:
The Bidder shall necessarily be a legally valid entity either in the form of a Limited Company or a Private Limited Company registered under the Indian Companies Act, 1956 or Country of Origin.

Bidder may be Joint Venture, Consortium or Association so long as they are formed and registered prior to the bid submission date.

Copy of Certificate of Incorporation issued by Registrar of firms/companies is to be submitted in support of this criterion.

b) Only Class-I and Class-II local suppliers are eligible to participate in Domestic tender enquiry. Submit Chapter-8: Annexure-I & J with your bid/offer.

c) In case of Global Tender Enquiry, Indian Agent quoting on behalf of Foreign Principal Supplier should submit a certified copy of an Agreement/Memorandum of understanding (MOU) between both the parties, detailing services to be rendered by the Agency.

d) An undertaking (self-certificate) is to be submitted to demonstrate that the bidder satisfies the bidders' eligibility criteria, as mentioned in ITB Clause 1.1.2 in the form of declaration by the Bidder for Code of Integrity & conflict of interest as per Chapter-8: Annexure-L.

6.2 Technical Qualification Criteria

Criteria 1 - Experience and Past Performance:

a. The bidder (manufacturer or principal of authorized representative – hereinafter referred simply as 'The Bidder') should have regularly for at least the last 02 years, ending 31st March of the previous financial year (hereinafter called 'The relevant Date'), manufactured and supplied Steel and Aluminum Tools having similar accuracy mentioned in Chapter-4. The bidder should submit the manufacturer authorization form as appended in Chapter-8 and

b. 'The bidder' should have manufactured and supplied (/erected/commissioned) **at least 20 numbers** (herein after referred as 'The Qualifying Quantity') of similar steel tools for composite part manufacturing as specified in chapter-4 in at least one of the last five years ending on 'The relevant Date'

Criteria 2 - Capability- Equipment & manufacturing Facilities:

'The bidder' must have an annual capacity to manufacture and supply at least **50 tools** (The Qualifying Quantity)

The bidder should have valid ISO 9001-2015/AS9100:2016 certification for the manufacturing and inspection facility.

6.3 Financial Qualification Criteria

a. The average annual financial turnover of 'The bidder' during the last three years, ending on 'The relevant Date', should be at least **₹ 80 Lakhs** as per the annual report (audited balance sheet and profit & loss account) of the relevant period.

b. A copy of the annual report (audited balance sheet and profit & loss account) of the relevant period, duly authenticated by a Chartered Accountant/Cost Accountant in India or equivalent in relevant countries, is to be submitted in support of this criterion.

Ministry of MSME have clarified that all Central Ministries/Departments/Central Public Section Undertakings may relax condition of prior turnover and prior experience with respect to Micro and Small Enterprises in all public procurements subject to meeting of quality and technical specifications. Further, the condition of prior turnover and prior experience may be relaxed for Start-ups (as defined by Department of Industrial Policy and Promotion) subject to meeting of quality & technical specifications and making suitable provisions in the bidding document (rule 173 (i) of GFR 2017))

c. The net worth of the Bidder firm (manufacturer or principal of authorized representative) should not be negative on 'The Relevant Date' and also ii) should have not eroded by more than 30% (thirty percent) in the last three years, ending on 'The Relevant Date'.

Note: In case of Indian Bidders/companies (manufacturer or principal of authorized representative) who have been restructured by Banks in India, under the statutory guidelines, they would be deemed to have qualified the Financial standing criteria considering the institutional financial backing available to them.

Applicability in Special Cases:

a. **Applicability to 'Make in India':**
Bidders (manufacturer or principal of authorised representative) who have a valid/approved ongoing 'Make in India' agreement/ program and who while meeting all other criteria above, except for any or more of sub-criteria in Experience and Past Performance above, would also be considered to be qualified provided:

i)	their foreign 'Make-in-India' associates meet all the criteria above without exemption, and
ii)	the Bidder submits appropriate documentary proof for a valid/approved ongoing 'Make in India' agreement/program.
iii)	the bidder (manufacturer or principal of authorised representative) furnishes along with the bid a legally enforceable undertaking jointly executed by himself and such foreign Manufacturer for satisfactory manufacture, Supply (and erection, commissioning if applicable) and performance of 'The Product' offered including all warranty obligations as per the general and special conditions of contract.

b. **Authorized Representatives:**
Bids of bidders quoting as authorised representative of a principal manufacturer would also be considered to be qualified, provided:

i)	their principal manufacturer meets all the criteria above without exemption, and
ii)	the principal manufacturer furnishes a legally enforceable tender-specific authorisation in the prescribed form assuring full guarantee and warranty obligations as per the general and special conditions of contract; and
iii)	the bidder himself should have been associated, as authorised representative of the same or other Principal Manufacturer for same set of services as in present bid (supply, installation, satisfactorily commissioning, after sales service as the case may be) for same or similar 'Product' for past three years ending on 'The Relevant Date'.

c. **For Existing Successful Past Suppliers**:
In case the bidder (manufacturer or principal of authorised representative) who is a successful past supplier of 'The Product' in at least one of the recent past …..….**3……**procurements, who do not meet any or more of requirements above, would also be considered to be qualified in view of their proven credentials, for the maximum quantity supplied by him in such recent past.

d. **Joint Ventures and Holding Companies:**
Credentials of the partners of Joint ventures cannot (repeat cannot) be clubbed for the purpose of compliance of PQC in supply of Goods/Equipment, and each partner must comply with all the PQC criteria independently. However, for the purpose of qualifying the Financial Standing Criteria, the Financial Standing credentials of a Holding Company can be clubbed with only one of the fully owned subsidiary bidding company, with appropriate legal documents proving such ownership.

Note for Bidders:

a) 'Doctrine of Substantial Compliance':
The Pre-Qualification Bidding (PQB) and Pre- Qualification Criteria (PQC) are for shortlisting of sources who are competent to perform this contract to ensure best value for money from expenditure of Public Money. This process is neither intended to bestow any entitlement upon nor to create any rights or privileges for the Bidders, by way of overly hair-splitting or viciously legalistic interpretations of these criteria, disregarding the very rationale of the PQB and PQC. Keeping this caveat in view, interpretation by the Purchaser would be based on common usage of terminologies and phrases in public procurement in accordance with the 'Doctrine of Substantial Compliance' and would be final.

b) The Bidder must declare, whether asked or not in a bid document, any previous transgressions of such a code of integrity with any entity in any country during the last three years or of being debarred by any other Procuring Entity. Failure to do so would amount to violation of this code of integrity.

c) In case of agents quoting in offshore procurements, on behalf of their principal manufacturers, one agent cannot represent two manufacturers or quote on their behalf in a particular tender enquiry. One manufacturer can also authorize only one agent/ dealer. There can be only one bid from the following:

i)	The Principal manufacturer directly or through one Indian agent on his behalf; and
ii)	Indian/foreign agent on behalf of only one principal.

d) Along with all the necessary documents/certificates required as per the tender conditions, the bidder should furnish a brief write-up, backed with adequate data, explaining his available capacity (both technical and financial), for manufacture and supply of the required goods/equipment, within the specified time of completion, after meeting all their current commitments.

e) Supporting documents submitted by the bidder must be certified as follows:

i)	All copy of supply/work order; respective completion certificate and contact details of clients; documents issued by the relevant Industries Department/National Small Industries Corporation (NSIC)/manufacturing license; annual report, etc., in support of experience, past performance and capacity/capability should be authenticated by the by the person authorized to sign the tender on behalf of the bidder. Original Documents must be submitted for inspection, if so demanded.
ii)	All financial standing data should be certified by certified accountants, for example, Chartered Accountants/Cost Accountants or equivalent in relevant countries; and Indian bidder or Indian counterparts of foreign bidders should furnish their Permanent Account Number.

f) A bidder or any of its affiliates who participated as a consultant in the preparation of the design or technical specifications of the contract i.e. the subject of the bid; cannot participate in the bidding process.

g) Indian agents quoting on behalf of its foreign principal need to submit a copy of the agency agreement with the foreign principal detailing the services to be rendered by them on behalf of the principals, failing which its bid shall not be considered.

h) Foreign bidders to disclose the name and address of agent and representatives in India and Indian bidder to disclose their foreign principal or associates.

CHAPTER - 7

Contract Form

Contract No. _____Date:_____

THIS CONTRACT AGREEMENT is made
the [insert: number] day of [insert: month], [insert: year].

BETWEEN

(1) The Council of Scientific & Industrial Research registered under the Societies Registration Act 1860, of the Government of India having its registered office at No. 2, Rafi Marg, New Delhi: 110001, Republic of India represented by National Aerospace Laboratories, Bengaluru (hereinafter called "the Purchaser"), and

(2) [insert name of Supplier], a corporation incorporated under the laws of [insert: country of Supplier] and having its principal place of business at [insert: address of Supplier] (hereinafter called "the Supplier").

WHEREAS the Purchaser invited bids for certain Goods and ancillary services, viz., [insert brief description of Goods and Services] and has accepted a Bid by the Supplier for the supply of those Goods and Services in the sum of [insert Contract Price in words and figures, expressed in the Contract currency(ies)] (hereinafter called "the Contract Price").

NOW THIS AGREEMENT WITNESSETH AS FOLLOWS:

01. In this Agreement words and expressions shall have the same meanings as are respectively assigned to them in the Conditions of Contract referred to.

02. The following documents shall constitute the Contract between the Purchaser and the Supplier, and each shall be read and construed as an integral part of the Contract:

(a)	This Contract Agreement
(b)	General Conditions of Contract
(c)	Special Conditions of Contract
(d)	Technical Requirements (including Schedule of Requirements and Technical Specifications)
(e)	The Supplier's Bid and original Price Schedules
(f)	The Purchaser's Notification of Award
(g)	[Add here any other document(s)]

03. This Contract shall prevail over all other Contract documents. In the event of any discrepancy or inconsistency within the Contract documents, then the documents shall prevail in the order listed above.

04. In consideration of the payments to be made by the Purchaser to the Supplier as hereinafter mentioned, the Supplier hereby covenants with the Purchaser to provide the Goods and Services and to remedy defects therein in conformity in all respects with the provisions of the Contract.

05. The Purchaser hereby covenants to pay the Supplier in consideration of the provision of the Goods and Services and the remedying of defects therein, the Contract Price or such other sum as may become payable under the provisions of the Contract at the times and in the manner prescribed by the Contract.

IN WITNESS whereof the parties hereto have caused this Agreement to be executed in accordance with the laws of Union of India on the day, month and year indicated above.

For and on behalf of the Council of Scientific & Industrial Research Signed:

[insert signature]
in the capacity of [insert title or other appropriate designation] in
the presence of [insert identification of official witness]

Signed: [insert signature]
in the capacity of [insert title or other appropriate designation] in
the presence of [insert identification of official witness]

For and on behalf of the Supplier

Signed [insert signature of authorized representative(s) of the Supplier] in
the capacity of[insert title or other appropriate designation]
in the presence of [insert identification of official witness]

CHAPTER - 8

Other Standard Forms
(To be enclosed as indicated below)

TABLE OF CONTENTS

Sl. No.	Name	Annexure
~~1~~	~~Bid Security Form (to be enclosed with the technical bid)~~	~~A~~
2	Bid Securing Declaration (to be enclosed with the technical bid)	B
3	Bidder Information Form (to be enclosed with the technical bid)	C
4	Bid Form (to be enclosed with the priced bid)	D
5	Manufacturers' Authorisation Form (to be enclosed with the technical bid)	E
6	Performance Statement Form (to be enclosed with the technical bid)	F
7	Service Support Detail Form (to be enclosed with the technical bid)	G
8	Format of declaration of abiding by the code of integrity and conflict of interest to be submitted by the bidder (to be enclosed with the technical bid)	H
9	Certificate of Local Content	I
10	Certificate of Price Break-up of local content (to be enclosed with the Price bid)	J
~~11~~	~~Integrity Pact (to be enclosed with the technical bid), if any To be executed on Company's Letterhead duly stamped and signed~~	~~K~~
12	Self-Certification	L
13	Deviation Statement Form (to be enclosed with the technical bid)	M
14	Performance Security Form (to be submitted on award of Contract)	N
15	Acceptance Certificate Form (to be submitted on award of Contract)	O
16	Terms and Conditions	
17	~~Non-Disclosure Agreement (to be submitted on award of Contract)~~	

Note: Please refer Clause 1.10.1 of the bidding documents for other documents to be attached with the bids/offers

Tender No.: ANNEXURE-A

BID SECURITY FORM

Whereas..... (hereinafter called the tenderer) has submitted their offer dated …… for the supply of……hereinafter called the tender). Against the Purchaser's Tender No…… KNOW ALL MEN by these presents that WE……. of ……. having our registered office at……are bound unto……(hereinafter called the "Purchaser"). In the sum of ……

For which payment will and truly to be made to the said Purchaser, the Bank binds itself, its successors and assigns by these presents. Sealed with the Common Seal of the said Bank this ……day of…….20……...

THE CONDITIONS OF THIS OBLIGATION ARE:

(1)	If the tenderer withdraws or amends or modifies or impairs or derogates from the Tender in any respect within the period of validity of this tender OR	
(2)	If the tenderer having been notified of the acceptance of his tender by the Purchaser during the period of its validity	
	(a)	If the tenderer fails to furnish the Performance Security for the due performance of the contract.
	(b)	Fails or refuses to accept/execute the contract.

We undertake to pay the Purchaser up to the above amount upon receipt of its first written demand, without the Purchaser having to substantiate its demand, provided that in its demand the Purchaser will note that the amount claimed by it is due to it owing to the occurrence of one or both the two conditions, specifying the occurred condition or conditions.

This guarantee will remain in force up to and including 45 (forty five) days after the period of tender validity and any demand in respect thereof should reach the Bank not later than the above date.

_____

(Signature of the authorised officer of the Bank

Name and designation of the officer
Seal, name & address of the Bank and address of the Branch

Note: Whenever the bidder chooses to submit the Bid Security in the form of Bank Guarantee, then he should advise the banker issuing the Bank Guarantee to immediately send by Registered Post with acknowledgement due an unstamped duplicate copy of the Guarantee directly to the Purchaser with a covering letter to compare with the original BG for its correctness.

NOT APPLICABLE

Tender No.: ANNEXURE-B

BID-SECURING DECLARATION FORM

Date:_____

Bid No. _____

To (insert complete name and address of the purchaser)

I/We. The undersigned, declare that:

I/We understand that, according to your conditions, bids must be supported by a Bid Securing Declaration.

I/We accept that I/We may be disqualified from bidding for any contract with you for a period of one year from the date of notification, if I am/We are in a breach of any obligation under the bid conditions, because I/We

(a)	have withdrawn/modified/amended, impairs or derogates from the tender, my/our Bid during the period of bid validity specified in the form of Bid; or
(b)	having been notified of the acceptance of our Bid by the purchaser during the period of bid validity. (i) fail or refuse to execute the contract, if required, or (ii) fail or refuse to furnish the Performance Security, in accordance with the Instructions to Bidders.

I/We understand this Bid Securing Declaration shall cease to be valid, if I am/We are not the successful Bidder, upon the earlier of (i) the receipt of your notification of the name of the successful Bidder; or (ii) thirty days after the expiration of the validity of my/our Bid.

Signed: (insert signature of person whose name and capacity are shown) in the capacity of (insert legal capacity of person signing the Bid Securing Declaration).

Name: (insert complete name of person signing he Bid Securing Declaration)

Duly authorised to sign the bid for an on behalf of: (insert complete name of Bidder)

Dated on _____day of _____(insert date of signing)

Corporate Seal (where appropriate)

(Note: In case of a Joint Venture, the Bid Securing Declaration must be in the name of all partners to the Joint Venture that submits the bid)

Tender No.: ANNEXURE-C

BIDDER INFORMATION FORM

(a) [The Bidder shall fill in this Form in accordance with the instructions indicated below. No alterations to its format shall be permitted and no substitutions shall be accepted. This should be done of the letter head of the firm]

Date : [insert date (as day, month and year) of Bid Submission]

Tender No .:[insert number from Invitation for bids]

01.	Bidder's Legal Name [insert Bidder's legal name]
02.	In case of Joint Venture, the legal name of each party: [insert legal name of each party in JV]
03.	Bidder's actual or intended Country of Registration: [insert actual or intended Country of Registration]
04.	Bidder's Year of Registration: [insert Bidder's year of registration]
05.	Bidder's Legal Address in Country of Registration: [insert Bidder's legal address in country of registration]
06.	Bidder's Authorised Representative Information Name: [insert Authorized Representative's name] Address: [insert Authorized Representative's Address] Telephone/Fax numbers: [insert Authorized Representative's telephone/fax numbers] Email Address: [insert Authorized Representative's email address]
07.	Attached are the copies of original documents of: Articles of Incorporation or Registration of the firm named in 1, above.

Signature of the Bidder _____

Name _____

Business Address _____

BID FORM

[The Bidder shall fill in this Form in accordance with the instructions indicated and NO alterations to its format shall be permitted and no substitutions shall be accepted.]

Date : [insert date (as day, month and year) of Bid Submission]

Tender No. :

To : Director, CSIR-NAL, Bengaluru

We, the undersigned, declare that:

(a)	We have examined and have no reservations to the Bidding Documents, including Addenda No.: [insert the number and issuing date of each Addenda]
(b)	We offer to supply in conformity with the Bidding Documents and in accordance with the Delivery Schedules specified in the Schedule of Requirements the following Goods and Related Services [insert a brief description of the Goods and Related Services] as specified in Chapter - IV
(c)	The total price of our Bid, excluding any discounts offered in item(s) below, is: [insert the total bid price in words and figures, indicating the various amounts and the respective currencies]
(d)	The discounts offered and the methodologies for their application are: Discounts. If our bid is accepted, the following discounts shall apply. [Specify in detail each discount offered and the specific item of the Schedule of Requirements to which it applies.]
(e)	Our bid shall be valid for the period as specified in ITB Clause 1.17.1, from the date fixed for the bid submission due date in accordance with ITB Clause 1.19 and it shall remain binding upon us and may be accepted at any time before the expiration of that period.
(f)	If our bid is accepted, we commit to obtain a performance security in accordance with ITB Clause 1.43 and GCC Clause 2.12 for the due performance of the Contract and also submit order acceptance within 14 (fourteen) days from the date of contract in accordance with ITB Clause 1.42 and GCC Clause 2.44;
(g)	The following commissions, gratuities, or fees have been paid or are to be paid with respect to the bidding process or execution of the Contract: [insert complete name of each Recipient, its full address, the reason for which each commission or gratuity was paid and the amount and currency of each such commission or gratuity]

Name of the Recipient	Address	Reason	Amount
_____	_____	_____	_____
_____	_____	_____	_____

(If none has been paid or is to be paid, indicate "none.")

(h)	We understand that this bid, together with your written acceptance thereof included in your notification of award, shall constitute a binding contract between us, until a formal contract is prepared and executed.
(i)	We understand that you are not bound to accept the lowest evaluated bid or any other bid that you may receive.

Signed: [insert signature of person whose name and capacity are shown]
In the capacity of [insert legal capacity of person signing the Bid Submission Form]
Name: [insert complete name of person signing the Bid Submission Form]
Duly authorised to sign the bid for and on behalf of: [insert complete name of Bidder]
Dated on _____day of _____, _____[insert date of signing]

Tender No.: ANNEXURE-E

MANUFACTURERS' AUTHORISATION FORM

[The Bidder shall require the Manufacturer to fill in this Form in accordance with the instructions indicated. This letter of authorisation should be on the letterhead of the Manufacturer and should be signed by a person with the proper authority to sign documents that are binding on the Manufacturer.]

Date : [insert date (as day, month and year) of Bid Submission]

Tender No. :[insert number from Invitation For Bids]

To : [insert complete name and address of Purchaser]

WHEREAS

We [insert complete name of Manufacturer],who are official manufacturer's of [insert type of goods manufactured], having factories at [insert full address of Manufacturer's factories], do hereby authorize [insert complete name of Bidder] to submit a bid the purpose of which is to provide the following Goods, manufactured by us [insert name and or brief description of the Goods], and to subsequently negotiate and sign the Contract.

We hereby extend our full guarantee and warranty in accordance with Clause 2.20 of the General Conditions of Contract, with respect to the Goods offered by the above firm.

Signed: [insert signature(s) of authorized representative(s) of the Manufacturer]

Name: [insert complete name(s) of authorized representative(s) of the Manufacturer]

Title: [insert title]

Duly authorised to sign this Authorisation on behalf of : [insert complete name of Bidder]

Dated on _____day of _____, _____[insert date of signing]

Tender No. ANNEXURE-F

PERFORMANCE STATEMENT FORM

Details of similar equipment/systems supplied & installed during past three years in India & Abroad

Name of the Bidder_____

Order placed by (full address of the Purchaser)	Order No. and date	Description and quantity of ordered equipment	Value of order	Date of completion of deliver as per contract	Date of actual completion of delivery	Remarks indicating reasons for late delivery, if any	Has the equipment been installed/ working satisfactory? (Attach a certificate from the Purchaser / Consignee)	Name of the Contact person along with Telephone No., Fax No. and e-mail address

Signature and Seal of the manufacturer/Bidder …….

Place :

Date :

Tender No.: ANNEXURE-G

SERVICE SUPPORT DETAIL FORM

Sl. No.	List of similar type of equipment's serviced in the past three years	Address, Telephone Nos., Fax No. and e-mail address of the buyer	Nature of training Imparted / Service provided	Name and address of service provider

Signature and Seal of the Manufacturer/Bidder…….

Place :

Date :

Tender No.: ANNEXURE–H

Format for declaration by the Bidder for Code of Integrity & Conflict of Interest
(This declaration should be furnished on the Bidders Letter Head)

Ref. No: _____ Date _____

To,

_____

_____

(Name & address of the Purchaser)

Sir/Madam,

With reference to your Tender No._____ dated _____ I/We hereby declare that we shall abide by the Code of Integrity for Public Procurement as mentioned under Para 1.3.0 of ITB of your Tender document and have no Conflict of Interest.

The details of any previous transgressions of the Code of Integrity with any entity in any country during the last three years or of being debarred by any other Procuring Entity are as under:

a)
b)
c)

We undertake that we shall be liable for any punitive action in case of transgression/contravention of this code.

Thanking you,

Yours Sincerely,

Signature
(Name of the Authorised Signatory)
Company Seal

Tender No.: ANNEXURE-I

Certificate of Local Content
(to be enclosed along with Technical Bid)

We M/s. _____(Name of Bidder) hereby certify that we meet the minimum

Local content for the Goods and services offered vide our offer/bid No. _____dated

_____as specified below:

- Class-I Local Supplier with local content of 50% and above
  OR
- Class-II Local Supplier with local content of 20% and above but less than 50%
  (Tick appropriate category of Local Supplier)

We are not claiming the services such as transportation, insurance, installation, commissioning, training, after sales service (warranty or AMC/CMC support), consultancy and custom clearance including custom duty as local value addition.

We are aware that the false declarations will be in breach of the Code of Integrity under Rule 175(1)(i)(h) of the General Financial Rules (Govt of India) for which we or our successors can be debarred for up to two years as per Rule 151 (iii) of the General Finance Rules along with such other actions as may be permissible under law.

Signed : [insert signature of person whose name and capacity are shown]
In the capacity of [insert legal capacity of person signing the Bid Submission Form]

Name : [insert complete name of person signing the Bid Submission Form]

Duly authorized to sign the bid for and on behalf of: [insert complete name of Bidder]

Dated on _____day of _____, _____[insert date of signing]

Tender No.: ANNEXURE-J

Certificate of Price break up of Local Content
(to be enclosed along with Price Bid)

Ref: Clause 1.30.9 and Chapter-9(Part-A) of the Tender No. _____

We M/s. _____ (Name of Bidder) hereby certify that we meet the minimum

Local content for the Goods and services offered vide our offer/bid No._____ dated_____as specified below:

- Class-I Local Supplier with local content of 50% and above
  OR
- Class-II Local Supplier with local content of 20% and above but less than 50%
  (Tick appropriate category of Local Supplier)

Minimum Local content is % as per Price break up given below:

Component of Cost		Imported Product		Domestic value addition to product	
		In Foreign Currency US% or specify	In Rupees Exchanged Rate 1 US$ - Rs.	In Rupees	Location of value addition
Goods					
i)	Material				
ii)	Equipment				
iii)					
	Total Quoted Price = [X + Y]		X=	Y=	

$$\% \text{ Local Content} = \left\{ \frac{\mathbf{Y}}{\mathbf{X + Y}} \right\} \times 100$$

We are not claiming the services such as transportation, insurance, installation, commissioning, training, after sales service (warranty or AMC/CMC support), consultancy and custom clearance including custom duty as Local value addition.

We are aware that the false declarations will be in breach of the Code of Integrity under Rule 175(1)(i)(h) of the General Financial Rules (Govt of India) for which we or our successors can be debarred for up to two years as per Rule 151 (iii) of the General Finance Rules along with such other actions as may be permissible under law.

Signed : [insert signature of person whose name and capacity are shown]
In the capacity of [insert legal capacity of person signing the Bid Submission Form]

Name : [insert complete name of person signing the Bid Submission Form]
Duly authorized to sign the bid for and on behalf of: [insert complete name of Bidder]
Dated on _____day of _____,

Tender No.: ANNEXURE–K

FORMAT OF INTEGRITY PACT

Between

Council of Scientific & Industrial Research (CSIR) a Society registered under the Indian Societies Act 1860 represented by _____hereinafter referred to as "The Principal".

And ……herein referred to as "The Bidder/ Contractor".

Preamble

The Principal intends to award, under laid down organisational procedures, contract(s) for …..... The Principal values full compliance with all relevant laws of the land, rules, regulations, economic use of resources and of fairness/transparency in its relations with its Bidder(s) and/or Contractor(s).

In order to achieve these goals, the Principal will appoint an Independent External Monitor (IEM), who will monitor the tender process and the execution of the contract for compliance with the principles mentioned above.

Section: 1 – Commitments of the Principal

(1) The Principal commits itself to take all measures necessary to prevent corruption and to observe the following principles:

(a) No employee of the Principal, personally or through family members, will in connection with the tender for, or the execution of a contract, demand, take a promise for or accept, for self or third person, any material or immaterial benefit which the person is not legally entitled to.

(b) The Principal will, during the tendering process treat all Bidder(s) with equity and reason. The Principal will in particular, before and during the tendering process, provide to all Bidder(s) the same information and will not provide to any Bidder(s) confidential/additional information through which the Bidder(s) could obtain an advantage in relation to the tendering process or the contract execution.

(c) The Principal will exclude from the process all known prejudiced person(s).

(2) If the Principal obtains information on the conduct of any of its employees which is a criminal offence under the IPC/PC Act, or if there be a substantive suspicion in this regard, the Principal will inform the Chief Vigilance Officer and in addition can initiate disciplinary action.

NOT APPLICABLE

Section: 2 – Commitments of the Bidder(s)/Contractor(s)

(1) The Bidder(s)/Contractor(s) commit himself to take all measures necessary to prevent corruption. He commits himself to observe the following principles during his participation in the tendering process and while executing the contract.

(a) The Bidder(s)/Contractor(s) will not, directly or through any other Person or firm, offer, promise or give to any of the Principal's employees involved in the tendering process or the execution of the contract or to any third person any material or other benefit which he/she is not legally entitled to, in order to obtain in exchange any advantage of any kind whatsoever during the tendering process or while executing the contract.

(b) The Bidder(s)/Contractor(s) will not enter with other Bidders' into any undisclosed agreement or understanding, whether formal or informal. This applies in particular to prices, specifications, certifications, subsidiary contracts, submission or non-submission of bids or any other actions to restrict competitiveness or to introduce cartelisation in the bidding process.

(c) The Bidder(s)/Contractor(s) will not commit any offence under the relevant IPC/PC Act; further the Bidder(s)/Contractor(s) will not use improperly, for purposes of competition or personal gain, or pass on to others, any information or document provided by the Principal as part of the business relationship, regarding plans, technical proposals and business details, including information contained or transmitted electronically.

(d) The Bidder(s)/Contractor(s) of foreign origin shall disclose the name and address of the Agents/representatives in India, if any. Similarly, the Bidder(s)/Contractors(s) of Indian nationality shall furnish the name and address of the foreign principals, if any. Further, details as mentioned in the "Guidelines on Indian Agents of Foreign Suppliers", shall be disclosed by the Bidder(s)/Contractor(s). Further, as mentioned in the Guidelines all the payments made to the Indian agent/representative have to be in Indian Rupees only. Copy of the "Guidelines on Indian Agents of Foreign Suppliers", is annexed and marked as Annexure.

(e) The Bidder(s)/Contractor(s) will, when presenting his bid, disclose any and all payments he has made, is committed to or intends to make to agents, brokers or any other intermediaries in connection with the award of the contract.

(2) The Bidder(s)/Contractor(s) will not instigate third person(s) to commit offences outlined above or be an accessory to such offences.

(3) The person signing IP shall not approach the courts while representing the matters to IEMs and he/she will await their decision in the matter.

Section: 3 – Disqualification from tender process and exclusion from future Contracts

(1) If the Bidder(s)/Contractor(s), before award or during execution has committed a transgression through a violation of Section - 2, above or in any other form such as to put his reliability or credibility in question, the Principal is entitled to disqualify the Bidder(s)/Contractor(s) from the tendering process or take action as per the procedure mentioned in the "Guidelines on Banning of Business Dealings". Copy of the "Guidelines on Banning of Business Dealings", is annexed and marked as Annexure - "B".

NOT APPLICABLE

Section: 4 – Compensation for Damages

(1) If the Principal has disqualified the Bidder(s) from the tender process prior to the award according to Section - 3, the Principal is entitled to demand and recover the damages equivalent to the Earnest Money Deposit/Bid Security.

(2) If the Principal has terminated the contract according to Section - 3, or if the Principal is entitled to terminate the contract according to Section - 3, the Principal shall be entitled to demand and recover from the Contractor Liquidated Damages of the contract value or the amount equivalent to Performance Bank Guarantee.

Section: 5 – Previous transgression

(1) The Bidder declares that no previous transgressions occurred in the last 3 (three) years with any other Company in any country conforming to the anti-corruption approach or with any other Public Sector Enterprise in India that could justify his exclusion from the tender process.

(2) If the Bidder makes incorrect statement on this subject, he can be disqualified from the tendering process or action can be taken as per the procedure mentioned in "Guidelines on Banning of Business Dealings".

Section: 6 – Equal treatment of all Bidders/Contractors/Sub-contractors

(1) The Bidder(s)/Contractor(s) undertake(s) to demand from all Sub-contractors a commitment in conformity with this Integrity Pact, and to submit it to the Principal before the signing of the contract.

(2) The Principal will enter into agreements with identical conditions as this one with all Bidders', Contractors' and Subcontractors'.

(3) The Principal will disqualify from the tendering process all bidders' who do not sign this Pact or violate its provisions.

Section: 7 – Criminal charges against violating Bidders/Contractors/Sub-contractors.

(1) If the Principal obtains knowledge of conduct of a bidder, Contractor or Sub-contractor or of an employee or a representative or an associate of a bidder, Contractor or Sub-contractor which constitutes corruption, or if the Principal has substantive suspicion in this regard, the Principal will inform the same to the Chief Vigilance Officer.

Section: 8 - Independent External Monitors

(1) The Principal appoints competent and credible Independent External Monitor for this Pact. The task of the Monitor is to review independently and objectively, whether and to what extent the parties comply with the obligations under this agreement.

(2) The Monitor is not subject to instructions by the representatives of the parties and performs his functions neutrally and independently. He reports to the Joint Secretary (Admin), CSIR.

NOT APPLICABLE

(3) The Bidder(s)/Contractor(s) accepts that the Monitor has the right to access without restriction to all Project documentation of the Principal including that provided by the Contractor. The Contractor will also grant the Monitor, upon his request and demonstration of a valid interest, unrestricted and unconditional access to his project documentation. The same is applicable to Sub-contractors. The Monitor is under contractual obligation to treat the information and documents of the Bidder(s)/Contractor(s)/Sub-contractor(s) with confidentiality.

(4) The Principal will provide to the Monitor sufficient information about all meetings among the parties related to the Project provided such meetings could have an impact on the contractual relations between the Principal and the Contractor. The parties offer to the Monitor the option to participate in such meetings.

(5) As soon as the Monitor notice, or believes to notice, a violation of this agreement, he will so inform the Management of the Principal and request the Management to discontinue or take corrective action, or to take other relevant action. The monitor can in this regard submit non-binding recommendations. Beyond this, the Monitor has no right to demand from the parties that they act in a specific manner, refrain from action or tolerate action.

(6) The Monitor will submit a written report to the Joint Secretary (Admin), CSIR within 8 to 10 weeks from the date of reference or intimation to him by the Principal and should the occasion arise, submit proposals for correcting problematic situations.

(7) Monitor shall be entitled to compensation on the same terms as being extended to/provided to Independent Director's of the CSIR.

(8) If the Monitor has reported to the Joint Secretary (Admin), CSIR, a substantiated suspicion of an offence under relevant IPC/PC Act, and the JS(A), CSIR has not, within the reasonable time taken visible action to proceed against such offence or reported it to the Chief Vigilance Officer, the Monitor may also transmit this information directly to the Central Vigilance Commissioner.

(9) The word 'Monitor', would include both singular and plural.

Section 9 – Pact Duration

This Pact begins when both parties have legally singed it. It expires for the Contractor 10 (ten) months after the last payment under the contract, and for all other Bidders 6 (six) months after the contract has been awarded.

If any claim is made/lodged during this time, the same shall be binding and continue to be valid despite the lapse of this pact as specified above, unless it is discharged/determined by JS(A), CSIR.

NOT APPLICABLE

Section 10 – Other provisions

(1) This agreement is subject to Indian Law. Place of performance and Jurisdiction is the Registered Office of the Principal, i.e., New Delhi

(2) Changes and supplements as well as termination notices need to be made in writing. Side agreements have not been made.

(3) If the Contractor is a partnership or a consortium, this agreement must be signed by all partners or consortium members.

(4) Should one or several provisions of this agreement turn out to be invalid, the remainder of this agreement remains valid. In this case, the parties will strive to come to an agreement to their original intentions.

NOT APPLICABLE

(For & On behalf of the Principal) (Office Seal)	(For & On behalf of Bidder/Contractor) (Office Seal)
Place……	Place……
Date……..	Date…….

Witness
1: (Name & Address): _____

Witness
2: (Name & Address): _____

Tender No. ANNEXURE-L

SELF CERTIFICATION

With reference to Clause No. 1.1.3, of this tender and GoI, Ministry of Finance Order No.: F. No. 6/18/2019-PPD, dated 23rd July, 2020, on "Restrictions under Rule 144 (xi), of the General Financial Rules (GFRs)", & OM No. F. No. 18/37/2020-PPD, dated 8th February, 2021, and as amended from time to time on the date of issue of Tender:

It is certified that

□ We are not a bidder of a country which shares a land border with India.

OR

□ We are a bidder of a country which shares a land border with India, however, we are eligible to bid in any procurement whether of goods or services as we are registered with the Competent Authority as specified in Ministry of Finance (GoI) Order No. 6/18/2019 – PPD, dated 23rd July 2020. Copy of valid registration is attached.

□ Tick as applicable

Place:

Date:

Authorised Signatory Name:
Company Seal

Tender No.: ANNEXURE-M

DEVIATION STATEMENT FORM
PART –I

The following are the particulars of deviations from the requirements of the tender specifications:

Sl.No.	Name of Specifications/ Parts/Accessories of Tender Enquiry	Specifications of quote Model / Part / Accessory	Compliance whether YES/NO	Deviation, if any to be indicated in unambiguous terms (The compliance/ Deviation should be supported by relevant Technical Literature)	Technical justification for the deviation, if any. If specification is superior/ inferior than asked for in the enquiry, it should be clearly brought out in the justification

Signature of Bidder

- If the Bidder offers more than one model, then the Compliance Statement must be enclosed for each and every model separately.
- The Technical and Commercial deviations should be indicated separately.
- If the Bidder fails to enclose the compliance statement, his bid is likely to be rejected.
- Where there is no deviation, the statement should be returned duly signed with an endorsement indicating “No Deviations”.

Place:

Date:

Signature and seal of the Manufacturer/Bidder

Tender No. ANNEXURE-M

PART II

I) The E-bid shall comprise of the documents as per the requirement of the tender document. The documents specified below should be scanned and uploaded in PDF Format in proper sequence. The scanned documents uploaded as part of bid should be scanned in high resolution for better readability.

Sr. No.	Tender Clause No./ Chapter/Annexure	Tender Requirement	Compliance	Document Submitted
1	ITB 1.16 Chapter 8: Annexure- A	EMD (to be valid till 45 days beyond the validity of Bid)	Yes / No	Yes / NA
2	Chapter-8, Annexure- B	Bid Securing Declaration Form	Yes / No	Yes / NA
3	ITB 1.18	Bid is Signed	Yes / No	Yes / NA
4	Chapter 8: Annexure–C	Bidder Information Form	Yes / No	Yes / NA
5	Chapter 8: Annexure- D	Bid Form-Tender Acceptance Form	Yes / No	Yes / No
6	Chapter 8: Annexure- E	Manufacturers Authorisation Form (MAF) (If bidder is not OEM))	Yes / No	Yes / NA
7	Chapter 8 - Annexure F	Performance Statement Form	Yes / No	Yes / NA
8	Chapter 8: Annexure G	Service Support details enclosed	Yes / No	Yes / NA
9	Chapter 8: Annexure- H	Declaration by the Bidder for Code of Integrity & conflict of Interest	Yes / No	Yes / NA
10	Chapter-8:Annexure- I	Self-Certification for Local Content [For Class-I or Class-II Local Suppliers]	Yes / No	Yes / NA
11	Chapter-8:Annexure- J	Price break-up for Local content [to be attached with price bid in case of two bids]	Yes / No	Yes / NA
12	Chapter 8: Annexure- K	Integrity Pact (if applicable)	Yes / No	Yes / NA
13	MSME Registration of appropriate authority	Documents to substantiate MSME Bidder status	Yes / No	Yes / NA
14	Self-Certification	1.1.3 & Chapter-8:Annexure-L	Yes / No	Yes / NA
15	Chapter 8:Annexure M - Part I & Part II	Deviation Statement Form enclosed	Yes / No	Yes / NA
16	Chapter-6, 6.1(a)	Certificate of Incorporation	Yes / No	Yes / NA
17	Chapter-6, 6.1(c)	Agency Agreement/MoU beween Foreign Principal and Indian Agency (If bidder if Agent of Foreign Principal) for Global Tender Enquiry)	Yes / No	Yes / NA
18	Unpriced bid with Technical specifications & Scope of Supply		Yes / No	Yes / NA

19	Chapter 6, 6.3(b)	Annual Financial Report (audited Balance Sheet and Profit & Loss Account) of the last Three Financial Years, duly authenticated by a Chartered Accountant / Cost Accountant	Yes / No	Yes / NA
20	Chapter 3	Schedule of Requirement	Yes / No	Yes / NA
21	Confidentiality and Non-Disclosure Agreement		Yes / No	Yes / No

Note: The documents comprising bid should be submitted in the above sequence in orderly manner.

II) The following are the particulars of deviation/compliances as per tender conditions and Clause No.1.26 of tender document

1	ITB 1.17	Bid Validity (90 days after the date of Bid opening)	Yes / No Bid Valid upto ….	Yes / NA
2	GCC/SCC 2.21	Warranty: As per SCC & Chapter-4	Yes / No	Yes / NA
3	GCC/SCC 2.12	Agree to submit Performance Security as per Clause 2.12.1 & as specified in SCC	Yes / No	Yes / NA
4	Terms and Conditions		Yes / No	Yes / NA
5	Original Equipment Manufacturer/Authorised Indian Agent agree to submit Contract Agreement in the Form as per Chapter-7, if any		Yes / No	Yes / NA

III) The financial qualification criteria as specified in Clause 6.3, of the tender document is fulfilled by us and the copies of the annual reports (audited balance sheet and profit & loss account) of the relevant period, duly authenticated by a Chartered Accountant/Cost Accountant, are submitted in support of the following information:

i) The average annual financial turnover of our firm M/s…… during the last three years, ending on 31st March, is more than, as per Chapter-6, Clause No.6.3, as per the following data:

Financial Year				Average
Annual Financial Turnover in Rupees crore				

ii) The net worth of our firm M/s._____, had not been negative on 31st March, and also it has not eroded by more than 30 (thirty) per cent in the last three years, ending on 31st March 2021, as per the following data:

Financial Year end date				
Net worth in Rupees lakh				

IV) Price bid comprises of BOQ (format in Chapter-6) filled up on GeM website https://www.gem.gov.in along with Annexure-J filled up and uploaded as Cover-1. Price break up for Local content (to be attached with Price bid in case of Two Bids) for Class - I or II, Local suppliers (Make in India) in the form of Annexure-J, if applicable.

Signature and seal of the Bidder

Date:

Tender No.: ANNEXURE-N

PERFORMANCE SECURITY FORM/STAND-BY LETTER OF CREDIT

MODEL BANK GUARANTEE FORMAT FOR PERFORMANCE SECURITY/ STAND-BY LETTER OF CREDIT

To,
……..

WHEREAS ..... (name and address of the supplier) (hereinafter called "the supplier") has undertaken, in pursuance of contract No. ……., dated ……., to supply (description of the goods and services) (herein after called "the contract").

AND WHEREAS it has been stipulated by you in the said contract that the supplier shall furnish you with a bank guarantee by a scheduled commercial bank recognised by you for the sum specified therein as security for compliance with its obligations in accordance with the contract;

AND WHEREAS we have agreed to give the supplier such a bank guarantee;

NOW THEREFORE we hereby affirm that we are guarantors and responsible to you, on behalf of the supplier, up to a total of ..... (amount of the guarantee in words and figures), and we undertake to pay you, upon your first written demand declaring the supplier to be in default under the contract and without cavil or argument, any sum or sums within the limits of (amount of guarantee) as aforesaid, without your needing to prove or to show grounds or reasons for your demand or the sum specified therein.

We hereby waive the necessity of your demanding the said debt from the supplier before presenting us with the demand.

We further agree that no change or addition to or other modification of the terms of the contract to be performed there under or of any of the contract documents which may be made between you and the supplier shall in any way release us from any liability under this guarantee and we hereby waive notice of any such change, addition or modification.

This guarantee shall be valid until the ……. day of……., 20….

(Signature of the authorised officer of the Bank)

…….
Name, designation and contact details of the officer

…….
Seal, Name & Address of the Issuing Branch of the Bank

Note:
Whenever, the bidder chooses to submit the Performance Security in the form of Bank Guarantee, he should advise the banker issuing the Bank Guarantee to immediately send by Registered Post with acknowledgement due an unstamped duplicate copy of the said Guarantee directly to the Purchaser with a covering letter to compare with the original BG for its correctness.

Acceptance Certificate					
PO No. NAL/PUR/				**Date:**	
Sub:	Certificate of Supply, Installation, Commissioning, Training and Acceptance of Goods & Services				
1	This is to certify that the equipment as detailed below has/have been received in good condition along with all the standard and special accessories (subjec to remarks in Para 2). The same has been installed, commissioned and accepted.				
(a)	Contract No.				
	Date				
	Value				
	Mode of Shipment				
(b)	Description of the Equipment				
(c)	Name of the Consignee		CSIR-NAL, Bengaluru		
(d)	Scheduled date of Delivery of the Consignment to the Laboratory/Institute				
(e)	**Details of LC Established**				
	Date of Establishment	**Date of Shipment**	**Date of Expiry**		
(f)	**Actual date of receipt of Consignment by the Laboratory/Institute**				
	Date of Shipment		**Date of Receipt at CSIR-NAL**		
(g)	Scheduled date for completion of Installation, Commissioning and acceptance				
(h)	Actual date of completion of Installation, Commissioning and acceptance				
(i)	Penalty for Late Delivery (at Laboratory / Institute level) Rs.				
(j)	Penalty for Late Installation, Commissioning and Acceptance (at Laboratory / Institute level) Rs.				
2	Details of accessories/items not yet supplied and recoveries to be made on that account				
Sr. No.	**Description**			**Amount to be recovered**	
3	The acceptance test has been done to our entire satisfaction. The Supplier has fulfilled his contractual obligations satisfactory - **Yes** **OR** The Supplier has **failed to fulfill** his contractual obligations with regard to the following:				
Sr. No.	**Description**			**Amount to be recovered**	
The amount of recovery on account of failure of the supplier to meet his contractual obligations is as indicated at Para 3					
4	Liquidated Damages/Penalty Percentage				
	No. of Days / Weeks delayed		**Amount to be recovered**		
5	Warranty Details				
6	Training, if any		COMPLETED/ NOT COMPLETED (attach training Certificate/document, if any)		
7	Details of Performance Security submitted in the form of Bank Guarantee / Demand Draft				
	BG No.	**Date**	**Amount in Rs.**	**Valid till**	**% of BG**
For Purchaser (Indenting Officer)			**For Purchaser (Project Leader)**		
Signature			Signature		
Name			Name		
Designation			Designation		
Name of the Laboratory/Institute	**CSIR-NAL**		Name of the Laboratory/Institute	**CSIR-NAL**	
Date			Date		
For Supplier					
Signature					
Name					
Designation					
Name of the Supplier					
Date					

TERMS & CONDITIONS

Tender No.	NAL/PUR/	
Sl. No.	Approximate weight of the Consignment	Approximate dimensions of the consignment
1		
2	Indian Customs Tariff No. and HSN No. (ICT & HSN No.)	
3	Country of Origin	
4	Percentage of Local Content	
5	Annual Turnover	
6	Type of Supplier	
7	Mode of Shipment By Air/SEA/Road/e-download	
8	Port of Destination	Final Destination
9	Delivery Term (INCO Term), as the case may be	
10	Delivery Schedule including Supply, Installation, Commissioning, Training and Acceptance	
a)	Delivery of the Item as per Chapter-4/BoQ [In weeks/Days/ Months from the date of PO/LC/ILC/ Advance [Mention the appropriate term]	
b)	Installation & Commissioning from the date of Delivery of item [In weeks/Days/Months]	
c)	Training from the date of Installation & Commissioning of item [In weeks/Days/Months]	
d)	Acceptance from the date of Training [In weeks/Days/Months]	
11	Installation & Commissioning (if any) Quoted Price inclusive or exclusive	
12	Training (if any) Quoted Price inclusive or exclusive	
13	Partial Shipment [If partial shipment required, the charges incurred towards partial shipment to be borne by the Bidder]	

14	Terms of Payment	
15	Currency of the Bid/Quotation	
16	Statutory Levies [GST/IGST or any other taxes, duties] Percentage of the tax to be mentioned.	
17	Bidder GST No.	
18	Bidder Bank Details along with Cancelled cheque	
19	Insurance Coverage as per GCC/SCC Clause No.2.16.1	
20	Warranty	
21	Agree to submit Performance Security as per GCC/SCC Clause No.2.12.1	
22	Integrity Pact as per GCC/SCC Clause No.2.42.1, to be signed and stamped on Organization's Letter head, if applicable	
23	Validity of the offer	
24	Order to be placed [Full address, Tel No., Fax No., Email ID, Contact Person]	
25	Nature of the item [to be specified] Hazardous / Radio Active / Perishable / Dangerous / Shelf-life or any other	
26	Bidder to mention in the quote, any special carrier requirement is necessary for transport viz Special License, ODC etc.,	
27	Any other	

28	Total Price quoted as per BoQ/Price Schedule/List of Deliverables exclusive of tax	
29	Total Price quoted as per BoQ/Price Schedule/List of Deliverables inclusive of tax	
30	If country of Origin is Foreign, Bidders may provide the following details, as per GOI Procurement Policies (DIPP Order No.P-45021/2/2017-PP (BE-II).	
	"Self-Certification that the item offered meets the minimum local content (in terms of percentage) giving details of the location(s) at which the local value addition is made in case the bidder wishes to avail the benefits under the Make in India Policy", if applicable.	
Note:	Unit Price indicating currency FOB (named port of shipment or FCA (named place of delivery)	

31. The average annual financial turnover of our firm M/s ……, during the last three years, ending on 31st March, is more than, as per Chapter-6, Clause No.6.3, as per the following data:

Financial Year				Average
Annual Financial Turnover in Rupees crore				

The net worth of our firm M/s._____, had not been negative on 31st March, and also it has not eroded by more than 30 (thirty) per cent in the last 3 (three) years, ending on 31st March, 2021, as per the following data:

Financial Year end date				
Net worth in Rupees lakh				

Signature and seal of the Bidder

Date:

Tax compliance terms and conditions for Foreign bidders.

The Bidder shall be responsible for payment of all Taxes on the income, surcharge on income tax and corporate tax in respect of the Contract, irrespective of the mode of General Conditions of Contract. CSIR-NAL, shall not in any way be liable for payment of such taxes.

The bidders' shall have to provide their Permanent Income Tax Number PAN, TAN and GST registration number, if applicable for the transactions as per the provisions of Indian Taxation.

The Bidder shall fully indemnify, save harmless and defend CSIR-NAL, including its officers, servants, agents and subsidiaries as well as the CSIR-NAL, from and against any and all loss and damages arising out of or with respect to failure of the Bidder (a) to comply with applicable laws and applicable clearances and/or (b) to make payments of taxes relating to the Bidder's Sub-bidders' and representatives income or other taxes required to be paid by the Bidder without reimbursement hereunder and/or (c) to pay amounts due as a result of materials or services furnished to the Bidder or any of its Sub-bidders' which are payable by the Bidder or any of its Sub-bidders' or any other person(s) employed or engaged by the Bidder in connection with the works.

If supplied through Indian agent, the Invoice should have GST Nos. printed on them, in the Tax invoice, cost and Tax amount should be mentioned separately.

All the taxes/Government levies, packing and forwarding and any other extra charges that you proposed to be charged, should be mentioned separately with the quote duly specifying their quantum. If not mentioned, your quote will be considered inclusive of all the charges. Kindly, note that your price offer must clearly mention the applicable taxes/government. levies/packing and forwarding/any other extra charges along with their quantum.

Any statutory increase in the taxes and duties subsequent to bidder's offer, if it takes place within the original contractual delivery date, will be borne by CSIR-NAL, subject to the claim being supported by documentary evidence. However, in the event of any decrease in statutory levies the advantage should be passed on to CSIR-NAL.

CSIR-NAL, shall be entitled to deduct in accordance with applicable law, Income Tax or withholding tax or other deductions (as the case may be), from any payments made to the Bidder, and the amount so deducted shall be deemed to be a payment made to the Bidder. CSIR-NAL, shall provide a certificate certifying the deduction so made.

Bidder shall provide following documents in order to avail the benefits of lower taxation specified under DTAA provisions.

1. a) Tax Residency Certificate (TRC) from the government of the country in which bidder is resident. TRC should include following details for claiming DTAA benefit as per Indian Tax law: 1) Status (Individual, company etc.,) of the assesse 2) Nationality 3) Assesse tax identification number (TIN) in the country of residence (unique no. in absence of TIN) 4) Period for which residence status is applicable 5) Address of assesse in the country

OR

If TRC is not provided or it TRC does not contain the above details, then vendor has to submit form 10F with Indian Income Tax authorities and provide acknowledgement copy of the same to CSIR-NAL. (10F format attached)

2. No PE (Permanent Establishment) declaration. (Format attached)

The bidders' may visit website of Income Tax Department of India for the details of Tax Liabilities, Rules, and Procedures etc.

Sl. No.	Activity	Compliance (Yes/No)
1	Whether TRC Available	Yes/No.
2	Whether TRC contains Status (Individual, company etc.,) of the assesse Nationality c) Assesse tax identification number (TIN) in the country of residence (unique no. in the absence of TIN) Period for which residence status is applicable Address of assesse in the country	Yes/No.
3	If answer to point no. 2 is No, then furnish acknowledgement copy of the form 10F submitted by the bidder with Indian Income Tax Authorities.	Yes/No.
4	Whether No PE Declaration Furnished	Yes/No.
5	If supplied through Indian Agents, Invoice should have GST Nos. printed on them, in the tax invoice, cost and tax amount should be mentioned separately	Yes/No.

Confidentiality and Non-Disclosure Agreement

This Confidentiality and Non-Disclosure Agreement ("Agreement") is made and entered into on this **day of …… (Year)** ("Effective Date") by and between……, a company incorporated under the provisions of the Companies Act, 1956, having its Business Office at ……, (**"XYZ"**), and **Council of Scientific and Industrial Research,** a society registered under the societies Registration Act XXI of 1860, having its Registered Office at Anusandhan Bhavan, 2 Rafi Marg, New Delhi 110001, represented by its **National Aerospace Laboratories**, located at P.B.No. 1779, HAL Airport Road, Kodihalli, Bangalore 560017, India (**"CSIR-NAL"**). Hereinafter either of the **Parties** is individually referred to as a **"Party"** and collectively as the **"Parties"** in this **Agreement.**

1. Disclosure of Confidential Information

For the purpose of this agreement, "**CSIR-NAL**" is "**Disclosing Party**" and "**XYZ**" is "**Receiving party**" Under this agreement, CSIR-NAL may disclose confidential information to the **Receiving** Party either orally or in any recorded medium, during discussions and pre-bid meetings for providing information comprising or relating to : techniques, schematics, designs, contracts, financial information, sales and marketing plans, business plans, clients, client data, business affairs, operations, strategies, inventions, methodologies, technologies, employees, subcontractors, pricing, service proposals, methods of operations, procedures, products and/or services ("Confidential Information") related to …… **programme**. Based on the disclosure, **Receiving Party will submit the tender for the RFQ generated from CSIR-NAL ("Purpose").** Confidential Information shall include all nonpublic information furnished, disclosed or transmitted regardless of form.

2. Confidentiality

It is agreed that:
Receiving Party will use the Confidential Information solely for above stated purpose of this agreement. Receiving Party shall not copy, reproduce or use the Confidential Information in any way that is directly or indirectly detrimental to Disclosing Party or its subsidiaries or affiliates, and shall not disclose the Confidential Information to any unauthorized third party without written authorization by the Disclosing Party. Receiving Party shall ensure that access to Confidential Information is granted only to those of its employees or agents ("Representatives") who have a demonstrated need to know such information in order to carry out the business purpose of this Agreement. Prior to disclosing any Confidential Information to such Representatives, Receiving Party shall inform them of the confidential nature of the information and their obligation to refrain from disclosure of the Confidential Information. Receiving Party and its Representatives will take all reasonable measures to maintain the confidentiality of the Confidential Information, but in no event less than the measures it uses for its own information of similar type. Receiving Party and its Representatives shall not disclose to any person including, without limitation, any corporation, sovereign, partnership, limited liability company, entity or individual (i) the fact that any investigations, discussions or negotiations are taking place concerning the actual or potential business relationship between the parties, (ii) that it has requested or received Confidential Information, or (iii) any of the terms, conditions or any other fact about the actual or potential business relationship. Receiving Party and its Representatives will immediately notify Disclosing Party of any use or disclosure of the Confidential Information that is not authorized by this Agreement. Receiving Party and its Representatives will use its best efforts to assist

NOT APPLICABLE

Disclosing Party in remedying any such unauthorized use or disclosure of the Confidential Information.

The parties have appointed the following individuals to coordinate the disclosure and receipt of Confidential Information under this Agreement:

For Name: Title: Address: Telephone: E-mail: Fax:	**For CSIR-NAL** Name: Designation: Division: Address: CSIR-National Aerospace Laboratories, HAL Airport Road, Kodihalli, Bengaluru–560 017, Telephone: Fax: E-mail:

Either Party may change above designated technical point of contact by informing other Party.

Any Notices will be in writing and sent to each party at its address below which may be changed upon written notice. Notices will be effective upon receipt.

For Name: Title: Address: Telephone: Fax: E-mail:	**For CSIR-NAL** Name: Title: Head, PBMD Address: CSIR-National Aerospace Laboratories, P.B.No. 1779, HAL Airport Road, Kodihalli, Bengaluru – 560 017 Telephone:080-25086207 Fax:080-25086147 E-mail:

NOT APPLICABLE

The obligations contained in this Section 2 will not apply to the extent that Receiving Party can demonstrate that the Confidential Information: (a) was part of the public domain at the time of disclosure or properly became part of the public domain, by publication or otherwise; (b) was rightfully acquired by Receiving Party from third Party prior to disclosure by Disclosing Party; (c) was independently developed by Receiving Party or its Representatives without reference to the Confidential Information; or (d) is in the possession of Receiving Party at the time of disclosure that may be demonstrated by business records of Receiving Party (e) is required to be disclosed by a government agency or by a proper court of competent jurisdiction; provided, however, that Receiving Party and its Representatives shall provide Disclosing Party prompt prior written notice of such requirement, shall consult with and assist Disclosing Party in obtaining a protective order prior to such disclosure, and shall only disclose the portion of Confidential Information which it has been advised by written opinion of counsel is legally required to be disclosed and shall use its best efforts to obtain assurance that confidential treatment will be accorded such information if the protective order is not obtained or if Disclosing Party waives disclosure of such information.

3. Ownership of Confidential Information

Disclosing Party retains all rights, title and interest to its Confidential Information. No license under any trademark, patent or copyright, or application for same which are now or hereafter may be obtained by Disclosing Party is either granted or implied by the disclosure of Confidential Information to Receiving Party. Confidential Information is provided "as is" basis. In no event shall Disclosing Party be liable for the accuracy or completeness of the Confidential Information.

4. Term

Unless renewed for a further period, this Agreement shall terminate **Five (05) years** from the Effective Date. For the term of this Agreement and **Ten (10) years** thereafter, the receiving party shall neither disclose the Disclosing Party's confidential information to any other third party.

5. Return of Confidential Information

During the term of this agreement, upon written request of Disclosing Party, Receiving Party and its Representatives shall promptly return to Disclosing Party all copies of Confidential Information in its possession including, without limitation, all copies of any analyses, compilations, studies or other documents prepared by Receiving Party or its Representatives containing or reflecting any Confidential Information. Receiving party shall certify in writing that it and its Representatives have returned all such information to Disclosing Party.

6. General

a) This Agreement and all questions relating to its validity, interpretation, performance and enforcement (including, without limitation, provisions concerning limitations of actions), shall be governed by and construed in accordance with the laws of India and is subject to the exclusive jurisdiction of the Courts of Bangalore, India and may be modified only in writing and signed as accepted by both the Parties.

b) Receiving Party agrees that the breach of the provisions of this Agreement by it, will cause Disclosing Party irreparable damage for which recovery of money damages would be inadequate. Disclosing Party will, therefore, be entitled to obtain timely injunctive relief to protect its rights under this Agreement in addition to any and all remedies available at law or in equity. Any Dispute or claim arising out of or relating to this Agreement shall be first tried to solve through mutual discussions by authorized representatives of both the Parties. If no conclusion is arrived at through such mutual discussions within a period of 30 days, then the dispute should be settled by arbitration in accordance with Delhi International Arbitration Center (DIAC), Delhi High Court, New Delhi. Decision of arbitral tribunal shall be final and binding on the Parties. Parties shall equally bear the cost of arbitration and its proceedings unless the award provides otherwise. The Parties shall continue to perform their respective obligations under this Agreement during the pendency of the arbitration proceedings except insofar as such obligations are the subject matter of the said arbitration proceedings.

c) Neither party may assign any of its rights or obligations under this Agreement without the prior written consent of the other party. This Agreement shall be binding upon and inure to the benefit of the parties permitted successors and assigns.

d) This Agreement may be amended or supplemented only by a writing that is signed by duly authorized representatives of both parties.

e) No term or provision hereof will be considered waived by either party, and no breach excused by it, unless such waiver or consent is in writing signed an authorized

NOT APPLICABLE

representative of the non-breaching party. No consent to, or waiver of, a breach by a party, whether express or implied, will constitute a consent to, waiver of, or excuse of any other, different, or subsequent breach.

f) Either party may terminate this Agreement upon service of 60 days' prior written notice to the said effect on the other party with return of confidential information as stated in Clause 5.

g) If any part of this Agreement is found invalid or unenforceable, that part will be amended to achieve as nearly as possible the same economic and legal effect as the original provision and the remainder of this Agreement will remain in full force.

h) This Agreement constitutes the entire agreement between the parties relating to this subject matter and supersedes all prior or simultaneous representations, discussions, negotiations, and agreements, whether written or oral.

In witness whereof, the parties hereto have Accepted and agreed this agreement as of the date first above written by the following authorized Party representatives:

NOT APPLICABLE

FOR AND ON BEHALF OF	**FOR AND ON BEHALF OF CSIR-NAL**
Signature: Name: Designation & Seal:	Signature: Name: Designation & Seal: **Head, PBMD**
Witnesses (Name & Signature): 1. 2.	Witnesses (Name & Signature): 1. 2.